SMSI (Swedish Multi Sector Invoice)

Freight Invoice Profile 2.1

Based on Global Invoice Message 2.0

www.beast.se www.odette.se www.swedfreight.se

SMSI (Swedish Multi Sector Invoice)

Freight Invoice Profile 2.1

Based on Global Invoice Message 2.0

International Copyright Information
This manual is subject to International Copyright as shown herein and **unauthorized** reproduction is not permitted. Contact one of the associations below to discuss reproduction permission. If translated, this manual has been translated and published for guidance only and is intended to help the understanding of the official English version.

AIAG Copyright and Trademark Notice:
The contents of all published materials are copyrighted by the Automotive Industry Action Group unless otherwise indicated. Copyright is not claimed as to any part of an original work prepared by a U.S. or state government officer or employee as part of the person's official duties. All rights are preserved by AIAG, and content may not be altered or disseminated, published, or transferred in part of such content. The information is not to be sold in part or whole to anyone within your organisation or to another company. Copyright infringement is a violation of federal law subject to criminal and civil penalties. AIAG and the Automotive Industry Action Group are registered service marks of the Automotive Industry Action Group.
© 2004 Automotive Industry Action Group

Japan Automobile Manufacturers Association (JAMA) Copyright Notice:
© 2004 Japan Automobile Manufacturers Association, Inc.

Japan Auto Parts Industries Association (JAPIA) Copyright Notice:
© 2004 Japan Auto Parts Industries Association

Odette Copyright Notice:
© 2004 Odette International Limited - All rights reserved.

Odette Sweden Copyright Notice:
© 2004 Odette Sweden - All rights reserved.

BEAst Copyright Notice:
© 2006 BEAst- All rights reserved.

Transportindustriförbundet Copyright Notice:
© 2006 Transportindustriförbundet - All rights reserved.

Table of Contents

FOREWORD **4**
Maintenance Publications 5

Acknowledgements **6**

SECTION 1: INTRODUCTION **7**

1.1 Problem Statement **7**
1.1.1 Business Opportunity 7
1.1.2 Problem Statement 7
1.1.3. Scope 7
1.1.4. References 7

1.2 Introduction to the Modelling Approach **8**

1.3 Stake holder's Needs **8**

SECTION 2: BUSINESS PROCESS MODEL **9**

2.1 Business Domain **9**

2.2 Invoice Business Process **12**
2.2.1 Business Process: Carrier-Initiated Invoice 14
2.2.2 Business Process: Supplier-Initiated Invoice 16

SECTION 4: UN/EDIFACT MESSAGE IMPLEMENTATION GUIDELINE **17**

4.1 Structure / Table of Contents **19**

4.2 Branching Diagram of Used Segments and Segment Groups **24**

4.3 Segment details **34**

5.1 Invoice Profile **141**
5.1.1 This message covers the invoicing function using one of the following processes. 141
5.1.2 Invoicing EU Directive 77/388/EC 143
5.1.3 Example Message for a Freight Invoice 146

5.2 Profile Chart **148**

APPENDIX 1: MAINTENANCE REQUEST FORM **149**

APPENDIX II: USED CODES **150**

FOREWORD

The global invoice project was started as a joint effort of AIAG, JAMA-JAPIA, and Odette to elaborate a harmonised electronic invoicing message as a common standard for global use in the automotive industry.

Participants in the project team are experts from automotive manufacturers and their suppliers as well as representatives of fiscal authorities, EDI and modelling experts.

Business experts in the project team were interviewed. Based on this information the business process was analysed and UML models of the process and connected activities were created. From these models the necessary data structures were derived.

The EDIFACT - standard was chosen as basis for the final electronic message.
Included in the document are a description of the process and its variants, UML-model diagrams and a message implementation guideline for the EDIFACT message.

SMSI (Swedish Multi Sector Invoice)

SMSI has been developed together by three user organisations in Sweden representing automotive, building & construction and transports. The organisations behind are

Odette Sweden
BEAst, Bygg- och Fastighetssektorns Elektroniska Affärsstandard
Sveriges Transportindustriförbund

The idea behind SMSI is to help in harmonising e-invoicing across business sectors like automotive, building & construction and transports. In every company there is more than one kind of purchasing procedure, some procedures or more general and others are more specialised and linked to a specific business situation. SMSI responds to cross-sector common requirements applied in:

- Purchase for manufacturing with the exception of highly specialised logistics flows
- Purchase of non-production items like supply of office products, maintenance products etc
- Purchase of services like transports
- Billing invoices (telecom services, energy supply services, etc)

The SMSI project started as a joint effort to adapt to the new European legislation on invoicing and VAT. The results are common implementation guidelines for SMSI based on the automotive Global Invoice Message 2.0 and these are published in this document.

The present version is the 2nd one of this document. The main changes are the following:

- Currency information is handled in a somewhat different way (as an exemple some codes in CUX have been changed)
- Some minor errors in the previous version have been corrected
- The VAT exempt codelist has been updated

Complementary information about this specification is available on the following links:

www.beast.se
www.odette.se
www.swedfreight.se

Maintenance Publications

The SMSI project has established a maintenance procedure. Please refer to the Maintenance Request Form at the back of this document to submit a request.

Addresses:

BEAst
Vasagatan 52
111 20 Stockholm
tel. +46 (070) 663 32 19
www.beast.se
e-mail: kansli@beast.se

Sveriges Transportindustriförbund
Sveriges Transportindustriförbund
Box 5384
(Storgatan 19, Plan 5)
102 49 Stockholm
tel. +46 (08) 762 71 00
fax +46 (08) 611 46 99
www.swedfreight.se
e-mail: mikael.kilander@schenker.com

Odette Sweden AB
Box 26173
(Karlavägen 14A)
SE-100 41 Stockholm, Sweden
tel +46 (08) 700 41 20
fax +46 (08) 791 23 11
www.odette.se
e-mail: sten.lindgren@odette.se

Acknowledgements

The following people and organizations have contributed to the content of Global Invoice Message 2.0.

AIAG

Patricia Mariles	PeopleSoft Incorporated
Robert Mulvey	Dana Corporation, Victor Reinz Division
Patricia Toufar	Infor

JAMA

Yoshikazu Shiozawa	Toyota Motor Corporation
Masanori Oosawa	Fuji Heavy Industries,Ltd.
Takahiro Suzuki	Yamaha Motor Co.,Ltd
Takanori Yamakawa	Isuzu Motors Co.,Ltd.
Yasuhiko Miyazawa	Isuzu Motors Co.,Ltd.
Takayuki Oda	Hino Motors Co., Ltd.
Eiji Hokada	Hino Motors Co., Ltd.
Sadako Hasunuma	Nissan Diesel Motor co., Ltd.

JAPIA

Yoshiyuki Iwatomi	Calsonic Kansei Corporation

ODETTE

Per-Olof Frantzen	Volvo IT
Kirsten Scheffler	BMW AG

OTHER

David Watt	HM Customs and Excise
Jörg Walther	Gefeg mbH

SMSI (Odette Sweden, BEAst, Transportindustriförbundet)

The following have contributed to the content of the current version of SMSI (Swedish Multi Sector Invoice)
Implementation Guidelines.

Anna Lundberg, Scania
Fredrik Andersson, Volvo IT
Lena Odelberg, AB Volvo
Mikael Kilander, Schenker
Per-Lennar Persson, BEAst
Per-Olof Frantzén, Volvo IT
Sören Lennartsson, SFTI
Stefan Sahlin, Scania
Sten Lindgren, Odette Sweden

SECTION 1: INTRODUCTION

The SMSI specification is a cross-sector specification that has been developed by automotive, building & construction and transports sector representatives. SMSI builds on a global automotive specification and therefore some of the wordings in this specification refer back to the original document where many references are made to automotive environment. For the sake of clarification these references have been kept in the SMSI specification, as could be seen in Section 1.

1.1 Problem Statement

1.1.1 Business Opportunity

Any industry can reduce its costs by developing a common recommended business practice through the electronic exchange of Invoice Business Information. By being early to market, we hope to have industry participants adopt this practice.
In the process of supply and usage of goods there is one point in time when one party must accept financial liability for the goods that have been either ordered or received or consumed. The process of generating and transmitting the according statement is called the invoicing process and communicates that funds are due for material/services.

1.1.2 Problem Statement

The data model shall contain these core components that are absolutely essential for the purpose described above. In addition, it will contain all data that might be necessary for legal or business reasons in certain regions, countries, or companies.

Although our final deliverable is an EDIFACT message implementation guideline, the technology of describing the process and data also enables any interested organisation or party to derive other compatible EDI-structures, for instance, XML-Schemas.

1.1.3. Scope

The project describes the invoicing process and its variants. It considers the legal statement and, to a certain extent, arguments or corrections of an invoice. It does not explain thoroughly the process that leads to a business relationship between the parties and the actual supply.
In detail the following functions will be in the scope of the INVOIC business domain:

- Traditional, supplier initiated invoice
- Self-billing invoice

The following tasks will **not** be in the scope of the INVOIC business domain:

- Reconciliation of an inaccurate invoice (commercial dispute)
- European and North American payment/remittance procedures

Compared with Global Invoice version 1, the following major changes / extensions apply:

- Additional information according to the Sixth European Union directive regarding tax exemption and special procedures.
- Several references to other business documents have been added on header and item level to enhance the business process traceability.
- The Tax Representative Party has been added.

1.1.4. References

- UN/EDIFACT INVOIC Message (D03A)
- UN/CEFACT's TMWG N090 Unified Modelling Methodology

1.2 Introduction to the Modelling Approach

This specification is based on a modelling approach. However in this version the model is not presented due to formal reasons. There are still some Change Requests on the Global Invoice V2 message that have not yet been formally approved. Chapter 2 and 3 are therefore excluded in this version of the document and will be published later.

In a continuous effort to attain global EDI harmonisation using UN/EDIFACT messages, this document is based on UN/CEFACT N090 Unified Modelling Methodology. The N090 guideline provides a process for message development with the facilitation of UML.

The initial step is to create Business Domain Use Case Diagrams.

From these diagrams, Use Case Descriptions are constructed that lead to the Activity Diagram. Once these works are complete, with the means of data –modelling, the data structure for generating user documentation and technical specifications is created. This data model can be translated into UN/EDIFACT syntax, XML, and future data exchange formats.

The project also used the Business Process Worksheet templates recommended by UN/CEFACT's BPMWG.

1.3 Stake holder's Needs

Customer Expectations

- Trading partner agreements must be established. This includes the transport protocol that is vital in understanding the wrappers/enveloping, response requirements, syntax, and message format.
- Accept liability only for material /service provided according to orders sent and prices agreed upon.
- Generation of a business document that fulfils all legal and tax requirements
- Reliable flow of business instructions, material and/or services as necessary for the ongoing production process.

Supplier Expectations

- Trading partner agreements must be established. This includes the transport protocol, which is vital in understanding the wrappers/enveloping, response requirements, syntax of the message, and message format.
- Being accurately paid for material and service.
- Generation of a document that fulfils all legal and tax requirements.
- Reliable flow of business instructions in order to enable the sales and delivery of material and/or services on an established contractual base. This information must also conform to legal requirements in order to enable the invoicing process and financial claims.

Stakeholders Outside of the Business Domain

Anyone not involved in the financial reconciliation process is outside this domain, such as engineering and manufacturing related personnel.

SECTION 2: BUSINESS PROCESS MODEL

2.1 Business Domain

Process Business	Marketing	Ordering	Distribution	**Settlement**	**Regulatory**
Manufacturing					
Financial					
Retail					
Transport				Invoicing	Invoicing
Services					

Table 1: Business Domain Matrix

The Freight Invoicing business process as described in this documentation is considered mainly as part of the Transport business and belongs to the settlement and regulatory (for taxation) processes.

Form: ebXML Business Process WS::BPS1 - Business Domain Worksheet	
1. Invoicing Domain	
Name	Provide a name for the reference model. You can use an existing reference model such as the Supply Chain Council or the Porter's Value Chain or create your own name. **Invoicing**
Description	A brief summary of this domain. **Business domain of an enterprise that is responsible for the calculation, storage, and communication of liabilities or claims due to transport services delivered or received.**
Industry Segment	Provide the name of the industry segment that this business applies to. Search the business process library for a list of possible industry segments. If the industry segment does not exist, then provide an appropriate name/label for the industry segment. **Multi sectors (Automotive – Building & construction – Transport –Supply chain)**
Business Areas	List the business areas within the scope. A business area is a collection of process areas. A process area is a collection of business processes. You may wish to refer to the ebXML Catalog of Business Processes that provides a list of normative categories that may be used as business areas. **Accounting**
Business Justification	Provide the business justification for the collection of business processes **Accounting data have to be updated (creditors and debtors ledger), taxation requirements and forecast of cash flow.**
Category Schema	Provide the name of the categorization schema used to reference use cases.
Stakeholders	Identify the practitioners that care about the definition of this business domain. At this level, this is likely to be some participants in an industry group (perhaps a standards body or an enterprise). These are the people who will define the BRV.] **Odette – Transportindustriförbundet (**Swedish International Freight Association) **– BEAst (The e-Business Association in Sweden for building & construction)** **European taxation authorities (represented by HMCE)**

Table 2: Business Domain Worksheet

Use Case Diagram:General View on Business Process

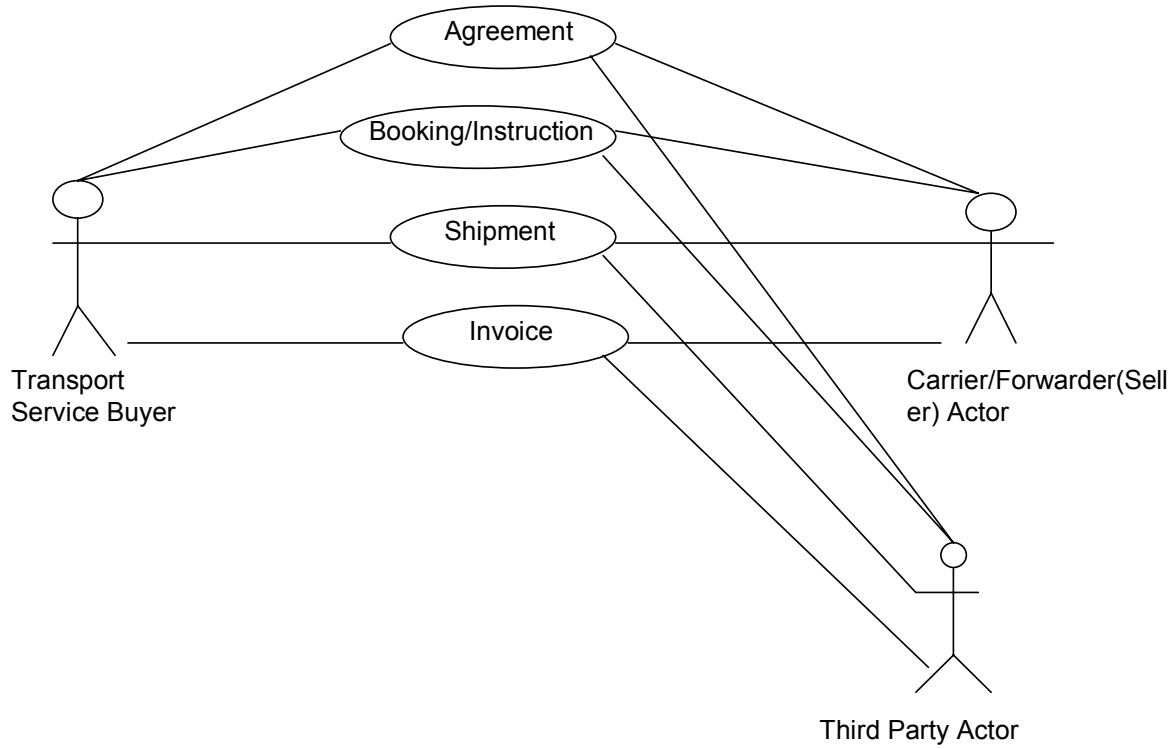

A Booking/Instruction business process includes generally

-a Booking/Instruction process (establishment of business relationship and exchange of shipment data)

-a shipment process (ordered shipment are physically brought to the Buyer)

-an invoice process (based on confirmed shipment data, the Buyer becomes liable for payment)

At least a buyer and supplier are included in the business process. One more third parties may be involved

Use Case Diagram: General View on Business Process

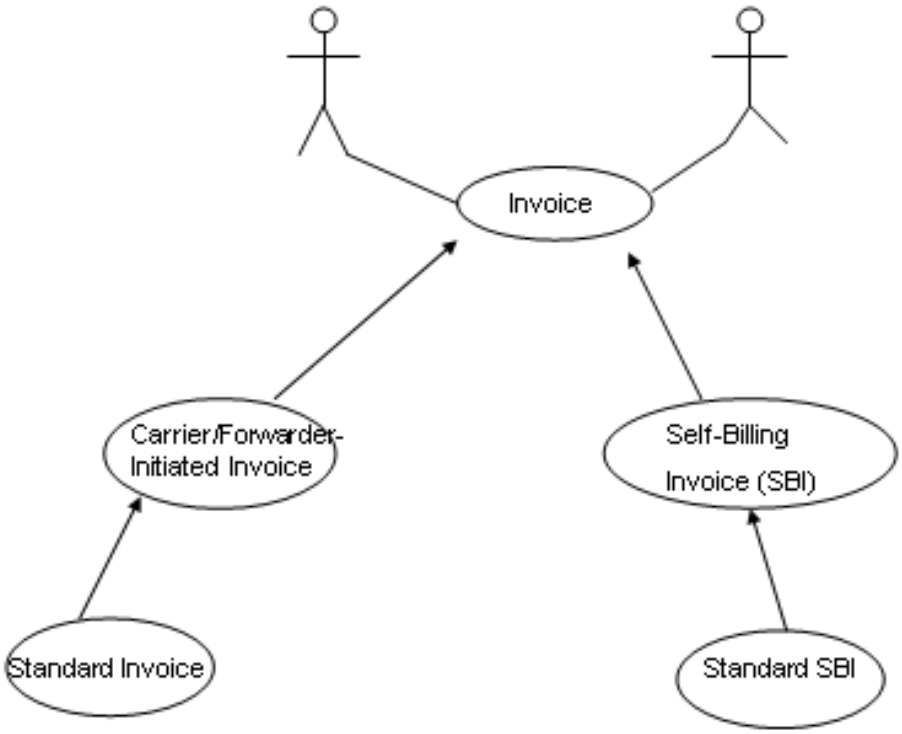

2.2 Invoice Business Process

Form: ebXML Business Process WS::BPS2 - Business Process Worksheet	
2. Invoice Business Process	
Name	Provide a name for the business process. This should be a name identified on the form "Identify Business Process" and on a "Describe Process Area" form. **Invoice BP**
Description	[A plain text explanation of the purpose and behaviour of the Business Process] **The invoice issuer generates a detailed statement of trade accounts payable (invoice message) based on existing contracts and/ or actually supplied services. The invoice recipient reconciles the statement of trade with the appropriate agreed pricing model, quantities and services, updates his own accounting system and finally makes payment remittance based on the same.**
Definition	A set of simple sentences that state the actions performed as part of the business process.
Business Requirements	The list of business requirements that apply to this business process. The format of requirement definition is covered (as shown in Annex 4, Business process Specification Template, in the UMM). **Economic event: goods or services have been provided / received in accordance with economic commitments (contracts).** **Economic resources: Goods- and passenger transport services** **Partner: Carrier/Forwarder, Transport Services Buyer**
Participants	List the type of partners involved in the business process. E.g. manufacturer, supplier, customer **Carrier/Forwarder(Seller) roles** **==========** **- Carrier/Forwarder: The party providing Transport services.** **- Payee: Recipient of the funds. (e.g. payment)** **- Ship-From: Identification of the party from where goods will be or have been shipped.** **Transport Services Buyer roles** **==========** **- Transport Services Buyer: Party mentioned in the transport document, which by contract with a carrier sends goods with that carrier. (also known as Consignor/ Ship from)** - Ship-to/Consignee: Party mentioned in the transport contract by which goods are to be received. **- Invoicee: Party to whom an invoice is issued** **- Delivery Party: Party to which goods are being delivered, if not identical with Ship-to.** **Intermediary (Third party)** **==========** **A commercial party who provides services to customers, suppliers, or authorities within the international supply chain:** **- Financial institution** **- Agent: Party authorised to act on behalf of another party** **- Broker or Sales office: Party acting in the name of the Seller or as a broker or as sales office.**
Preconditions	Preconditions are the rules for defining the conditions that must be true for the context that this process is conducted within. These rules are constraints that must be satisfied before instantiating or initializing the business process thus ensuring that the proper

	context for the process has been established. **A contract framework is established. Specification of transport and services are agreed upon.**
Begins When	Identifies the event(s) from that start this business process. **The Transport Services Buyer places a Transport Booking/Instruction (sends it to the Carrier/Forwarder(Seller)).**
Ends When	List all the event(s) that causes normal completion of the business process. **The invoice is submitted and there are no arguments (commercial dispute).**
Exceptions	List all exception conditions (events) that will cause the business process to terminate before its normal completion.
Post-conditions	Post-conditions are the rules for defining the conditions that must be true for the localized context that exists after the business process completes. These rules are constraints that must be satisfied after the business process thus ensuring that the proper update to context of the parent process has been occurred. **Payment**
Supporting BC and BP	List the business collaborations and business processes that support (are part of) this business process. **Carrier/Forwarder initiated Invoice** **-Standard commercial invoice** **-Self billed invoice (SBI)**

Table 3:

2.2.1 Business Process: Carrier-Initiated Invoice

Form: ebXML Business Process WS::BPS3 - Business Collaboration Specification	
3. Carrier/Forwarder Initiated Invoice (1)	
Collaboration Specification Name	Provide a name for the Business Collaboration **Carrier/Forwarder-Initiated Invoice**
Collaboration Specification Type	[Choice between Business Collaboration, Business Collaboration Protocol or Business Transaction Specification **Business Transaction Specification**
Description	A plain text explanation of the purpose and behaviour of the Business Collaboration **Carrier/Forwarder presents to Transport Services Buyer a detailed statement of trade account payable (invoice message). The Transport Services Buyer reconciles the statement of trade with the appropriate agreed pricing model and makes payment remittance based on the same.**
Definition	A set of simple sentences that state the actions performed as part of the business process. **Transport booking/instruction based on planned Despatch.** **Based on the agreed contract and demand instructions, Transport Services Buyer sends a transport booking to the carrier.** **Carrier/Forwarder sends a booking confirmation back to the Transport Services Buyer.** **Carrier/Forwarder picks up the goods.** **In some cases a proof of collect could be sent. (Status message).** **When Carrier/Forwarder delivers goods at final destination a proof of delivery could be sent to the Transport Services Buyer. (Status message)** **Transport Services Buyer verifies receipt of the Service.** **Issue Invoice** **For each conveyance to a unique destination, a unique identification number is assigned (e.g., shipment, proof of delivery). An invoice is generated to correspond to that unique identification number. The invoice should be Issued by the Carrier/Forwarder to the Transport Services Buyer.** **Reconciliation with Transport services** **Ship-to performs reconciliation of shipment for that unique identification number. Discrepancies are noted and the Carrier/Forwarder is advised.** **Transport Services Buyer and Carrier/Forwarder agree on adjustments of invoice amount based on contract terms.** **Update the creditor's ledger.**
Participants	List the type of partners involved in the business process. E.g. manufacturer, supplier, customer **Transport Services Buyer, Carrier/Forwarder(Seller)** **Ship-to (consignee), Ship-from (consignor)**
Preconditions	Preconditions are the rules for defining the conditions that must be true for the context that this process is conducted within. These rules are constraints that must be satisfied before instantiating or initializing the business process thus ensuring that the proper context for the

	process has been established. **Contracts are in place with agreed upon pricing model. Carrier/Forwarder booking instructions and ships accordingly. Ship-to receives goods and documents receipt.**
Begins When	Identifies the event(s) from that start this business process. **Carrier/Forwarder ships goods or provides services.**
Ends When	List all the event(s) that causes normal completion of the business process. **The invoice is submitted and there are no arguments (commercial dispute).**
Exceptions	List all exception conditions (events) that will cause the business process to terminate before its normal completion. **Commercial dispute, bankruptcy**
Post-conditions	Post-conditions are the rules for defining the conditions that must be true for the localized context that exists after the business process completes. These rules are constraints that must be satisfied after the business process thus ensuring that the proper update to context of the parent process has been occurred. **No remarks**

2.2.2 Business Process: Supplier-Initiated Invoice

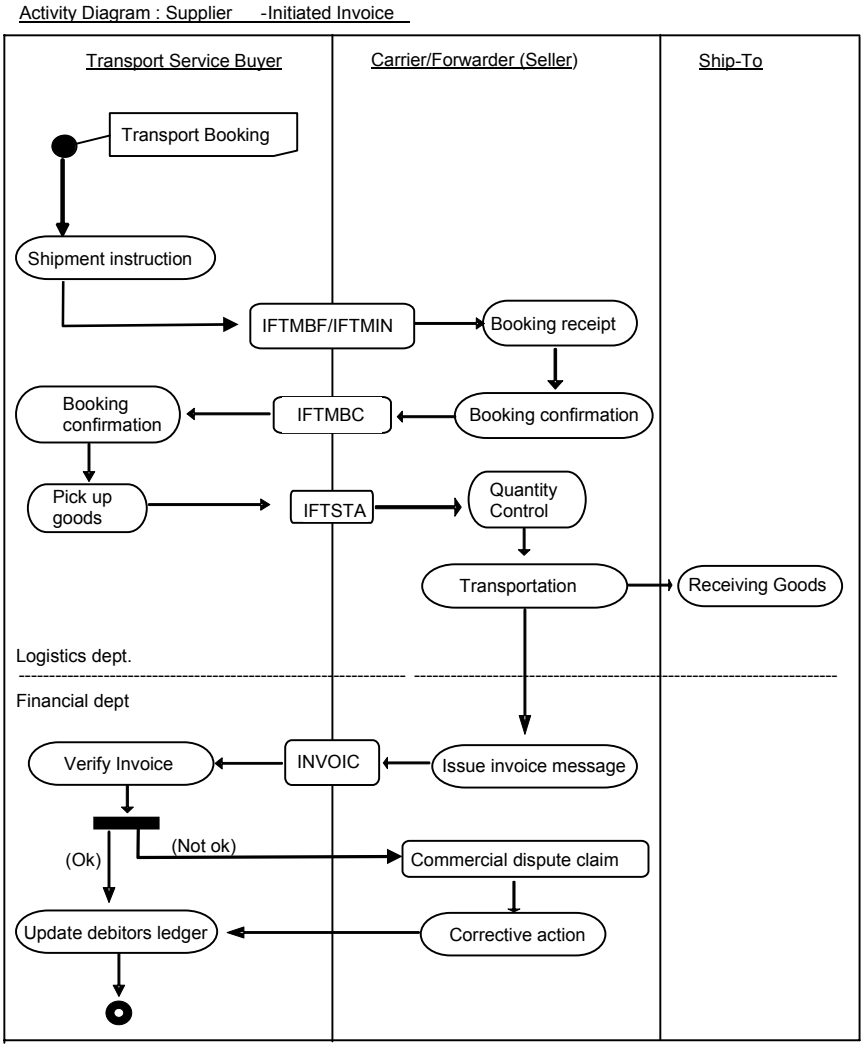

SECTION 4: UN/EDIFACT MESSAGE IMPLEMENTATION GUIDELINE

The message implementation guideline describes how the semantic content is being applied to the D.03A UN/EDIFACT standard message INVOIC.
It contains four different reports:

- A structure / table of contents report, which gives an overview of the segments and segment groups used in the message and their semantic usage.
- A branching diagram, which displays the structure in a different view.
- A segment details report, which explains the used segments in detail.
- A code lists report, which lists for each coded data element the applicable codes within the framework of this implementation guideline.

The original status information assigned by the UN/EDIFACT standard is expressed as follows:

UN/EDIFACT		Implementation
Status M	M -	mandatory within the scope of next higher hierarchy level (composite data element, segment, segment group, or message)
	N -	not used (applies only to component data elements), due to be subordinate to a not-used composite data element this component data element is not used
Status C	R -	required within the scope of next higher hierarchy level (composite data element, segment, segment group, or message)
	O -	optional within the scope of next higher hierarchy level (composite data element, segment, segment group, or message)
	D -	depending; rules are described in the comment
	N -	not used

Reading aid for the segment details report

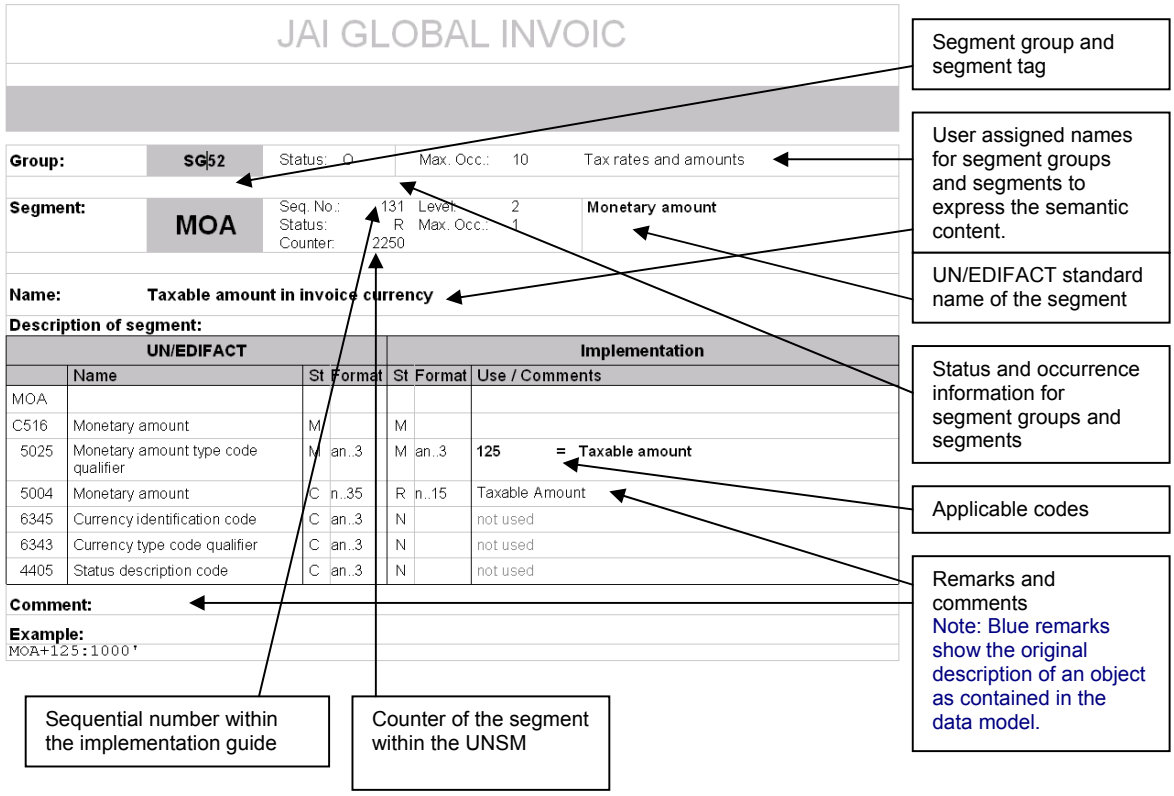

4.1 Structure / Table of Contents

Counter	No.	Tag	St	Rep	Content
0010	01	**UNH**	M	1	Message header
0020	02	**BGM**	M	1	Beginning of message
0030	03	**DTM**	R	1	Message date
0030	04	**DTM**	D	1	Horizon start date
0030	05	**DTM**	D	1	Horizon end date
0070	06	**FTX**	D	3	Legal info free text
0070	07	**FTX**	C	2	Free text Invoice Instruction
0120		**SG1**	O	13	Other Reference
0130	08	**RFF**	M	1	Reference number
0220		**SG2**	R	1	Buyer
0230	09	**NAD**	M	1	Buyer
0270		**SG3**	O	4	Buyer's reference number(s)
0280	10	**RFF**	R	1	Buyer's reference number(s)
0270		**SG3**	R	1	Buyer's VAT number
0280	11	**RFF**	M	1	Buyer's reference number(s)
0330		**SG5**	O	1	Buyer's information contact
0340	12	**CTA**	M	1	Contact information
0350	13	**COM**	O	5	Communication contact
0220		**SG2**	D	1	Invoicee
0230	14	**NAD**	M	1	Invoicee
0330		**SG5**	O	1	Invoicee's information contact
0340	15	**CTA**	M	1	Contact information
0350	16	**COM**	D	5	Communication contact
0220		**SG2**	R	1	Seller
0230	17	**NAD**	M	1	Seller
0250	18	**FII**	O	1	Seller's financial institution
0270		**SG3**	O	5	Seller's reference number(s)
0280	19	**RFF**	M	1	Sellers's reference number(s)
0270		**SG3**	D	R	Seller's VAT number
0280	20	**RFF**	M	1	Sellers's reference number(s)
0330		**SG5**	O	1	Accounting contact
0340	21	**CTA**	M	1	Accounting contact
0350	22	**COM**	O	5	Communication contact
0330		**SG5**	O	1	Information contact
0340	23	**CTA**	M	1	Contact information
0350	24	**COM**	O	5	Communication contact

Counter	No.	Tag	St	Rep	Content
0330		**SG5**	O	1	Sales contact
0340	25	**CTA**	M	1	Contact information
0350	26	**COM**	O	5	Communication contact
0220		**SG2**	D	1	Seller as officially registered
0230	27	**NAD**	M	1	Seller's official address
0270		**SG3**	R	1	Sellers VAT Number
0280	28	**RFF**	M	1	Sellers Official number(s)
0220		**SG2**	D	1	Payee
0230	29	**NAD**	M	1	Payee
0250	30	**FII**	D	1	Pay-to's financial institution
0270		**SG3**	R	4	Seller's reference number(s)
0280	31	**RFF**	M	1	Payee's reference number(s)
0330		**SG5**	O	1	Information contact
0340	32	**CTA**	M	1	Contact information
0350	33	**COM**	O	5	Communication contact
0220		**SG2**	D	1	Tax representative party
0230	34	**NAD**	M	1	Tax representative
0270		**SG3**	R	1	VAT registration number
0280	35	**RFF**	M	1	Reference
0400		**SG7**	R	2	Invoice Currency to Home, Invoice or Payment Currency
0410	36	**CUX**	M	1	Currencies
0420	37	**DTM**	D	1	Exchange rate date
0400		**SG7**	O	1	Pricing Currency to Invoicing or Payment currency
0410	38	**CUX**	M	R	Currencies
0420	39	**DTM**	D	1	Exchange rate date
0430		**SG8**	D	10	Payment instructions
0440	40	**PYT**	M	1	Payment terms
0450	41	**DTM**	R	1	Payment due date
0460	42	**PCD**	D	1	Payment percentage
0590		**SG12**	C	1	TOD-LOC
0600	43	**TOD**	M	1	Terms of delivery or transport
0610	44	**LOC**	C	1	Place/location identification
0740		**SG16**	C	9999	Allowances / Charges
0750	45	**ALC**	M	1	Allowance or charge
0870		**SG20**	C	2	MOA
0880	46	**MOA**	M	1	Monetary amount

Counter	No.	Tag	St	Rep	Content
0950		**SG22**	O	5	Tax
0960	47	**TAX**	M	1	Duty/tax/fee details
0970	48	**MOA**	R	1	Monetary amount
1090		**SG26**	R	9999	Line item section
1100	49	**LIN**	M	1	Line item
1140	50	**MEA**	O	5	Dimensions
1150	51	**QTY**	O	4	Quantities
1180	52	**DTM**	O	1	Goods receipt date
1180	53	**DTM**	O	1	Acceptance date
1180	54	**DTM**	D	5	Other Dates
1190	55	**GIN**	O	1000	Goods identity number
1230	56	**FTX**	O	10	Free text information
1250		**SG27**	O	7	Line item net amount
1260	57	**MOA**	M	1	Line item net amount in invoice currency
1250		**SG27**	O	1	Line Unit Price
1260	58	**MOA**	M	1	Line Unit Price in invoicing currency
1250		**SG27**	O	1	Amount in reference value
1260	59	**MOA**	M	1	Amount in reference currency
1390		**SG30**	O	10	References to messages
1400	60	**RFF**	M	1	Reference message number
1420		**SG31**	O	10	Packaging information
1430	61	**PAC**	M	1	Package
1510		**SG33**	O	10	Related location(s)
1520	62	**LOC**	M	1	Place/location identification
1550		**SG34**	O	5	VAT or other tax rate and amount for line item
1560	63	**TAX**	M	1	VAT or other tax rate line item
1570	64	**MOA**	O	2	VAT or other tax amount line item
1590		**SG35**	O	1	Ship-to party
1600	65	**NAD**	M	1	Ship-to
1590		**SG35**	O	1	Ship-from party
1600	66	**NAD**	M	1	Ship-from
1590		**SG35**	D	1	Carrier party
1600	67	**NAD**	M	1	Carrier
1590		**SG35**	D	1	Agent party
1600	68	**NAD**	M	1	Agent
1590		**SG35**	D	1	Brokers or Sales Office party

Counter	No.	Tag	St	Rep	Content
1600	69	**NAD**	M	1	Brokers or Sales Office party
1590		**SG35**	D	1	Delivery party
1600	70	**NAD**	M	1	Delivery
1720		**SG39**	D	10	Allowances or charges
1730	71	**ALC**	M	1	Allowance/charge
1830		**SG42**	R	2	Allowance/charge - monetary amount
1840	72	**MOA**	M	1	Allowance/charge - monetary amount
1910		**SG44**	O	2	Allowance/charge - applicable VAT rate and amount
1920	73	**TAX**	M	1	Allowance/charge - applicable VAT rate
1930	74	**MOA**	O	1	Allowance/charge - applicable VAT amount
1940		**SG45**	R	10	Transport details
1950	75	**TDT**	M	1	Transport information
2180	76	**UNS**	M	1	Section control
2190	77	**CNT**	O	3	Control total
2200		**SG50**	R	1	Invoice amount in Invoicing or payment currency
2210	78	**MOA**	M	1	Invoice amount in Invoicing or Payment currency
2200		**SG50**	D	1	Total invoice additional amount in Invoicing or Payment curren
2210	79	**MOA**	M	1	Total invoice additional amount in Invoicing or Payment Currency
2200		**SG50**	D	1	Total taxable amount in invoicing or payment currency
2210	80	**MOA**	M	1	Total taxable amount in invoicing or payment currency
2200		**SG50**	D	1	Total tax in invoicing or payment currency
2210	81	**MOA**	M	1	Total tax amount in invoicing or payment currency
2200		**SG50**	O	1	Total line items amount in invoicing or payment currency
2210	82	**MOA**	M	1	Total line items amount in invoicing or payment currency
2200		**SG50**	O	1	Total invoice price adjustment amount in invoicing or payment
2210	83	**MOA**	M	1	Total invoice price adjustment amount in invoicing or payment Currency
2200		**SG50**	O	1	Exemption amount
2210	84	**MOA**	M	1	Non-taxable or exemption amount
2200		**SG50**	O	1	Non-taxable
2210	85	**MOA**	M	1	Non-taxable or exemption amount
2250		**SG52**	R	4	Tax rates and amounts
2260	86	**TAX**	M	1	Tax type
2270	87	**MOA**	D	1	Tax amount in home currency
2270	88	**MOA**	D	1	Tax amount in Invoicing or payment currency
2270	89	**MOA**	R	1	Taxable amount in Invoicing or Payment currency

Counter	No.	Tag	St	Rep	Content
2330	90	**UNT**	M	1	Message trailer

4.2 Branching Diagram of Used Segments and Segment Groups

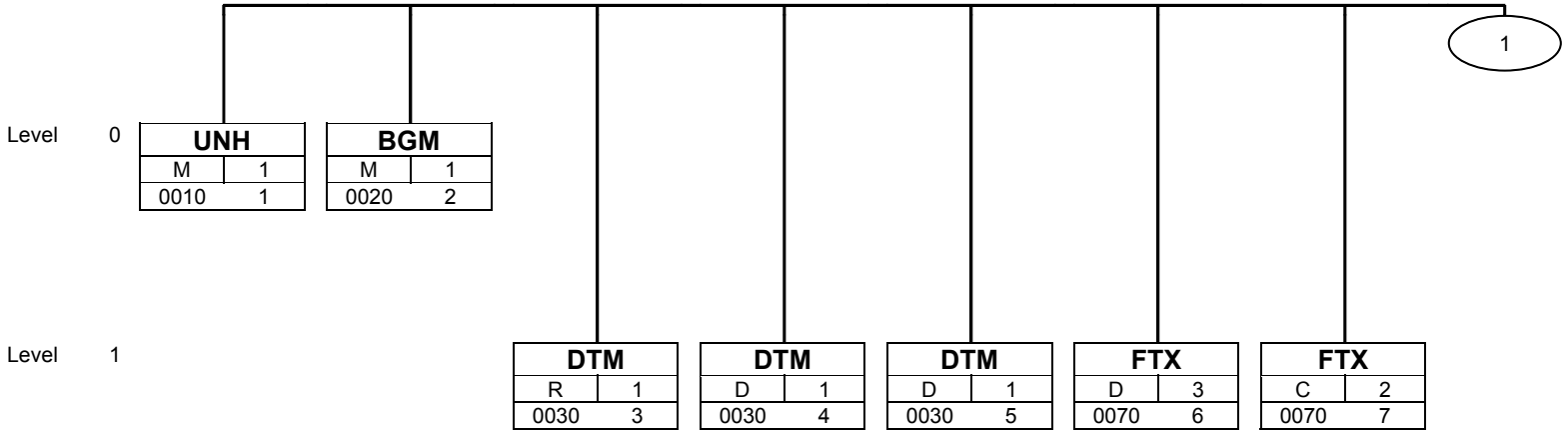

SMSI (Swedish Multi Sector Invoice)

Freight Invoice Profile 2.1 (Based on Global Invoice Message 2.0)

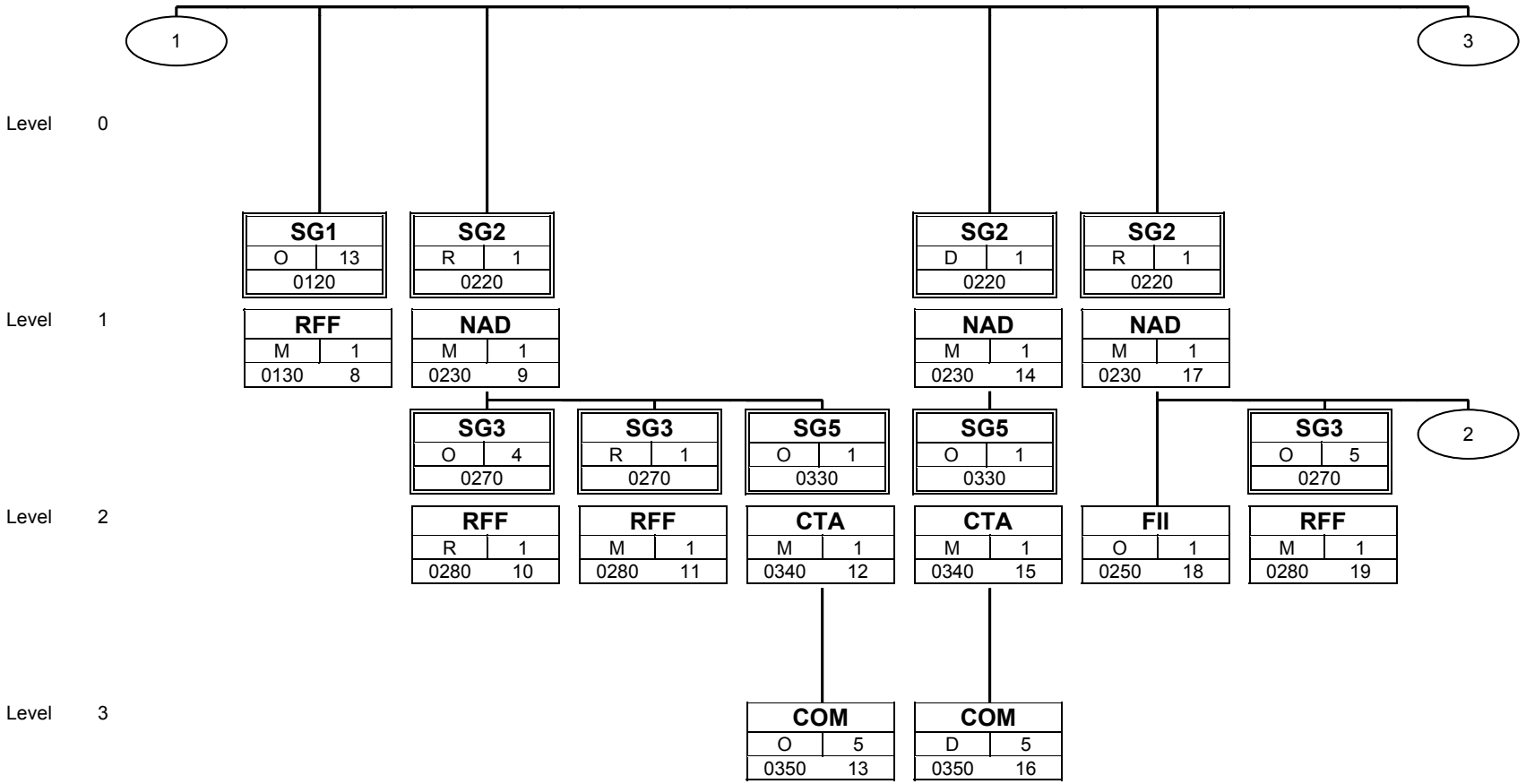

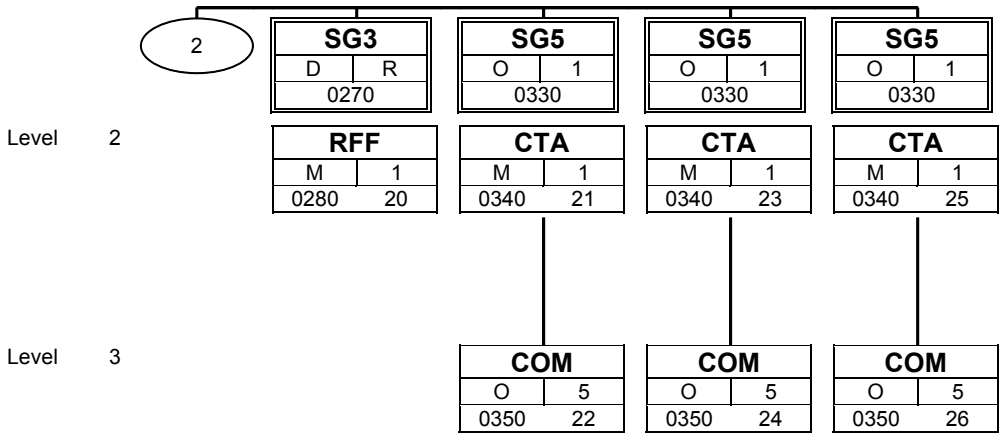
2
SG3
D R
0270
SG5
O 1
0330
SG5
O 1
0330
SG5
O 1
0330
Level 2
RFF
M 1
0280 20
CTA
M 1
0340 21
CTA
M 1
0340 23
CTA
M 1
0340 25
Level 3
COM
O 5
0350 22
COM
O 5
0350 24
COM
O 5
0350 26

SMSI (Swedish Multi Sector Invoice)

Freight Invoice Profile 2.1 (Based on Global Invoice Message 2.0)

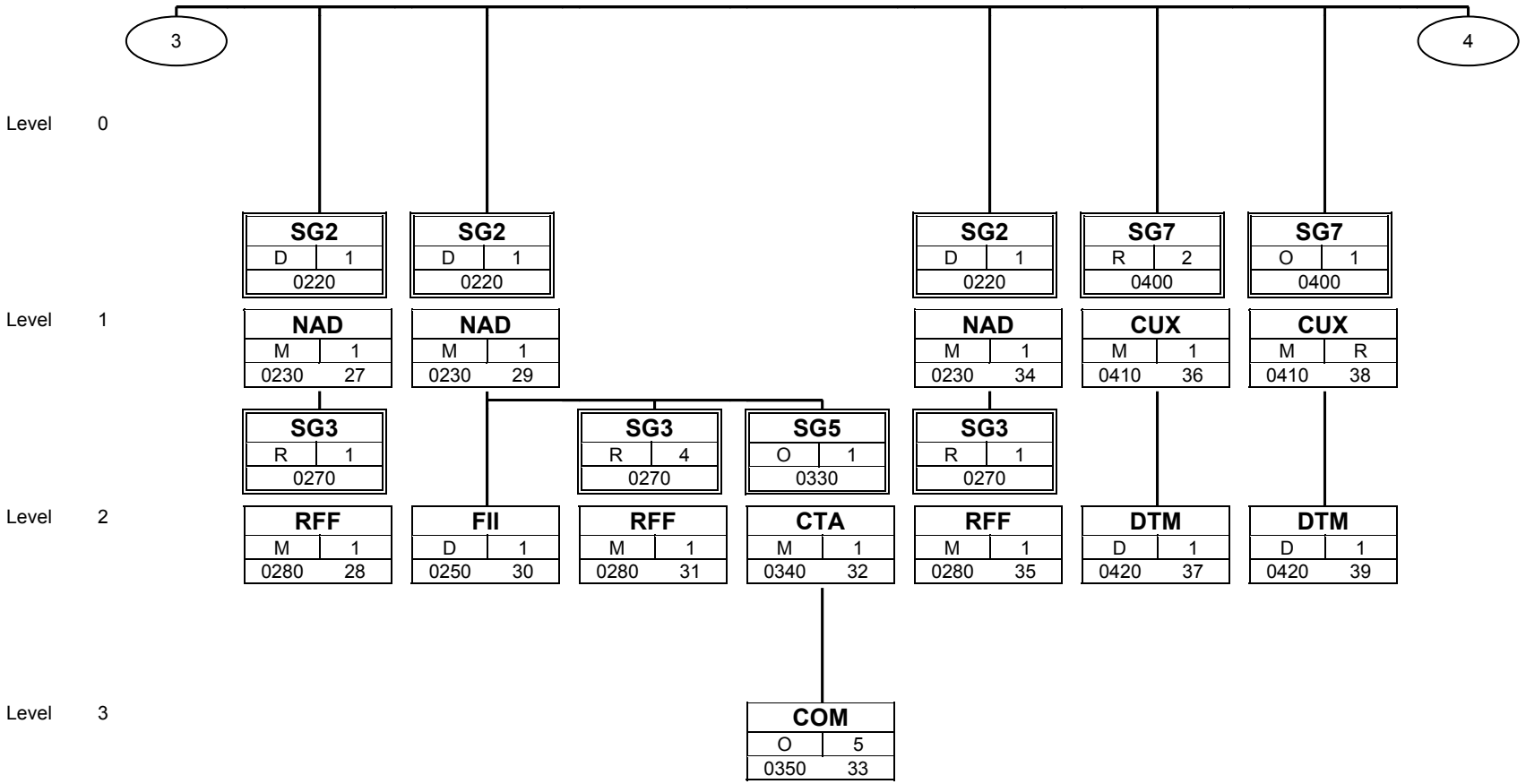

SMSI (Swedish Multi Sector Invoice)

Freight Invoice Profile 2.1 (Based on Global Invoice Message 2.0)

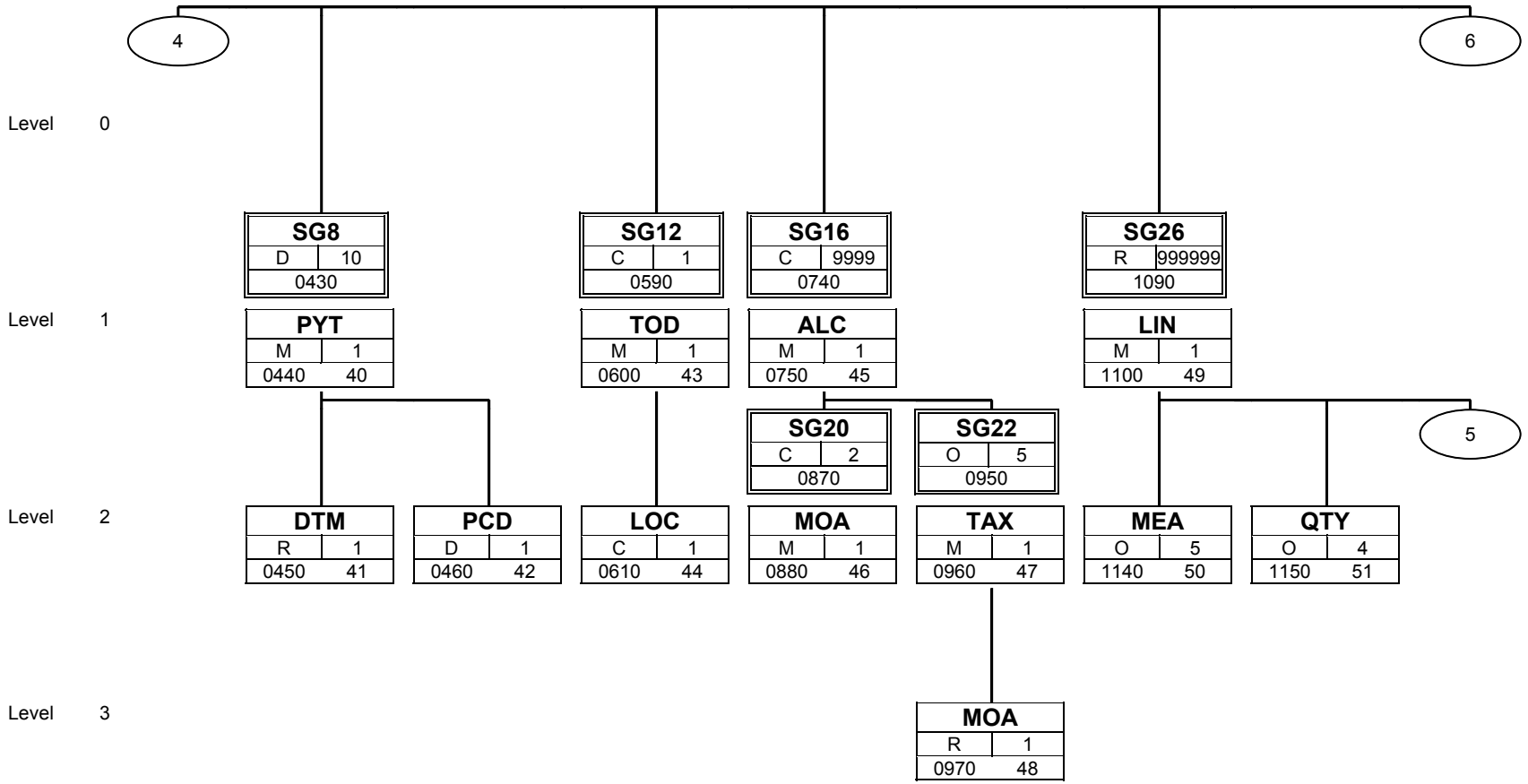

SMSI (Swedish Multi Sector Invoice)

Freight Invoice Profile 2.1 (Based on Global Invoice Message 2.0)

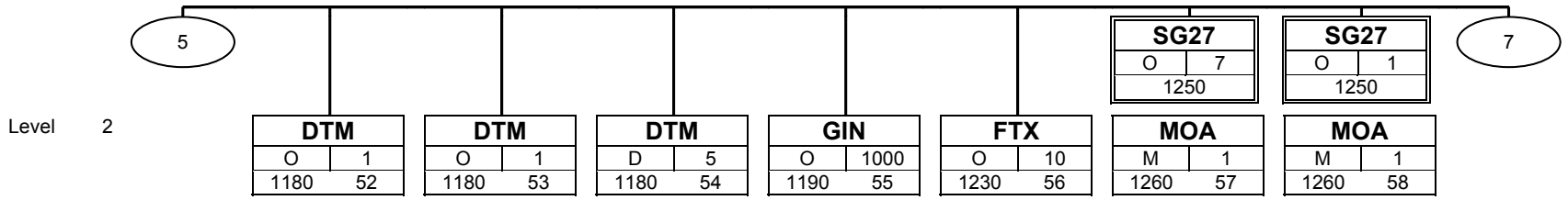

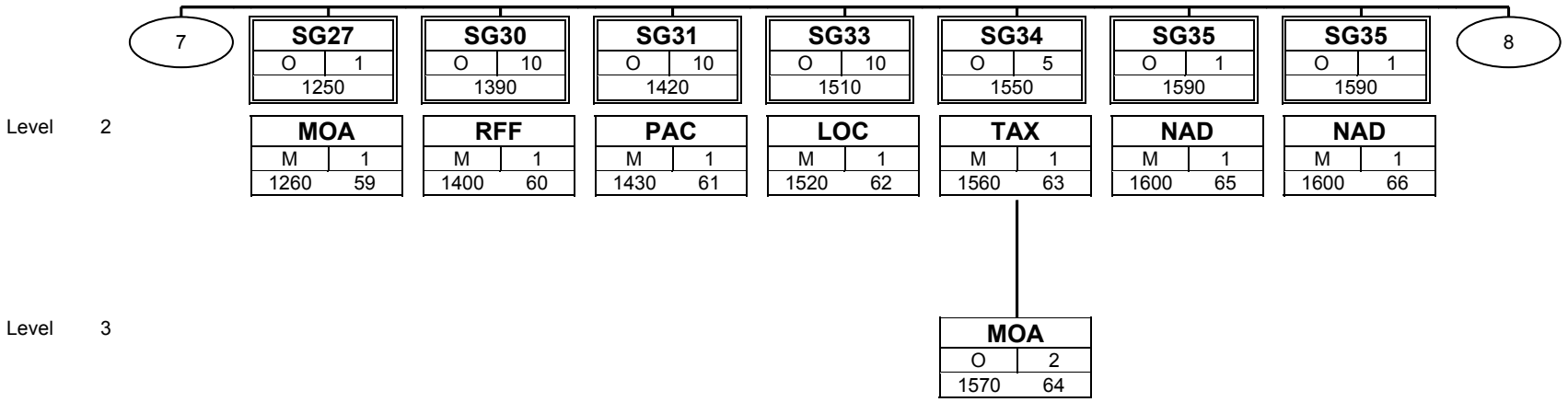
7
SG27
O 1
1250
SG30
O 10
1390
SG31
O 10
1420
SG33
O 10
1510
SG34
O 5
1550
SG35
O 1
1590
SG35
O 1
1590
8
Level 2
MOA
M 1
1260 59
RFF
M 1
1400 60
PAC
M 1
1430 61
LOC
M 1
1520 62
TAX
M 1
1560 63
NAD
M 1
1600 65
NAD
M 1
1600 66
Level 3
MOA
O 2
1570 64

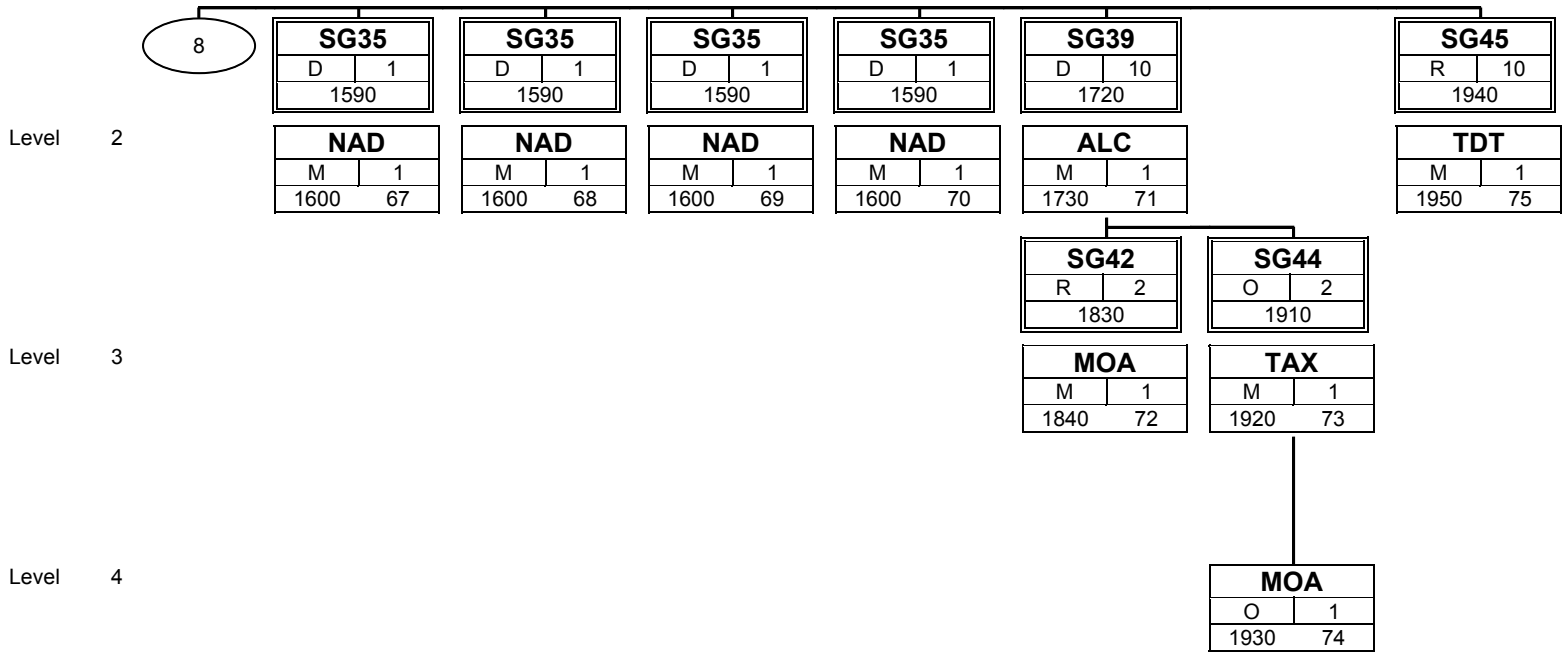
8
SG35 D 1 1590
SG35 D 1 1590
SG35 D 1 1590
SG35 D 1 1590
SG39 D 10 1720
SG45 R 10 1940
Level 2
NAD M 1 1600 67
NAD M 1 1600 68
NAD M 1 1600 69
NAD M 1 1600 70
ALC M 1 1730 71
TDT M 1 1950 75
SG42 R 2 1830
SG44 O 2 1910
Level 3
MOA M 1 1840 72
TAX M 1 1920 73
Level 4
MOA O 1 1930 74

SMSI (Swedish Multi Sector Invoice)

Freight Invoice Profile 2.1 (Based on Global Invoice Message 2.0)

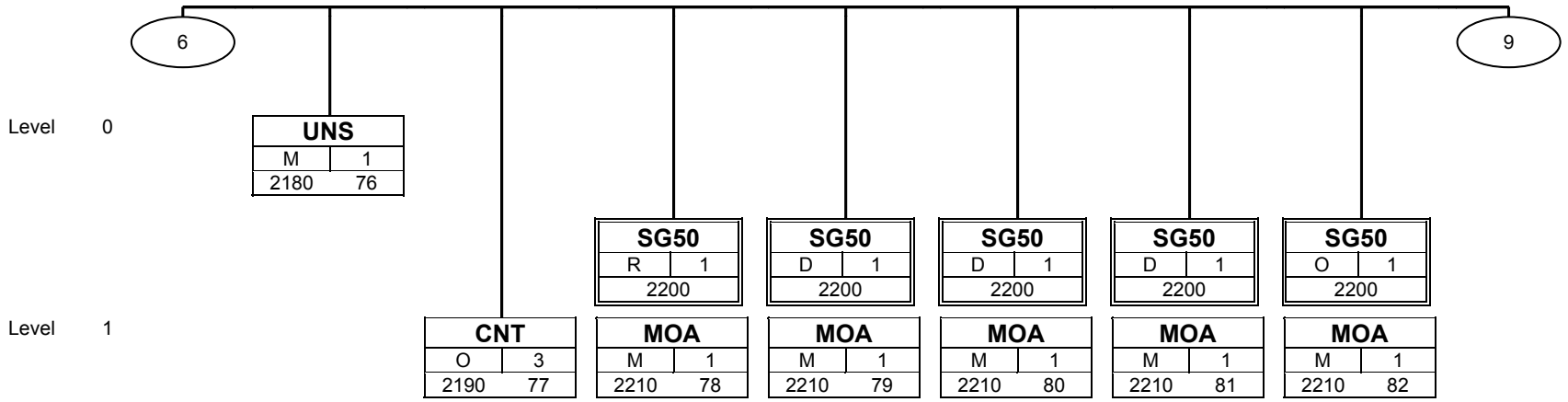

SMSI (Swedish Multi Sector Invoice)

Freight Invoice Profile 2.1 (Based on Global Invoice Message 2.0)

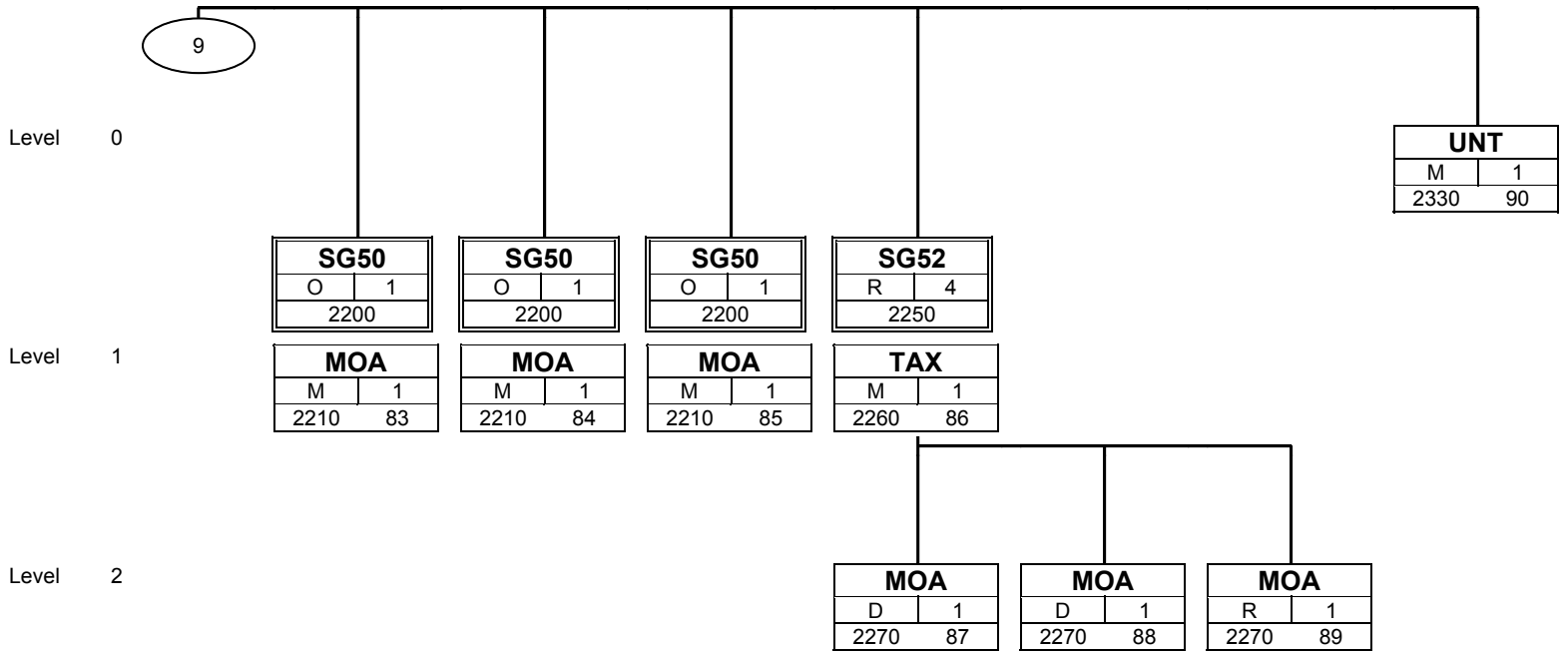

UN/EDIFACT Message: Segment details

4.3 Segment details

Segment: **UNH**

Seq. No.: 1 Level: 0 **Message header**
Status: M Max. Occ.: 1
Counter: 0010

Name: **Message header**

Description of segment:

UN/EDIFACT			Implementation	
	Name	St Format	St Format	Use / Comments
UNH				
0062	Message reference number	M an..14	M an..14	Message reference number - unique number to identify the message within the interchange, usually a consecutive number starting with 1.
S009	Message identifier	M	M	
0065	Message type	M an..6	M an..6	**INVOIC = Invoice message**
0052	Message version number	M an..3	M an..3	**D = Draft version/UN/EDIFACT Directory**
0054	Message release number	M an..3	M an..3	**03A = Release 2003 - A**
0051	Controlling agency	M an..2	M an..2	**OD = ODETTE (Organization for Data Exchange through Tele-Transmission in Europe)** **UN = UN/CEFACT**
0057	Association assigned code	C an..6	R an6	**GBS212 = SMSI Freight Invoice Profile 2.1**
0068	Common access reference	C an..35	N	not used
S010	Status of the transfer	C	N	
0070	Sequence of transfers	M n..2	N	not used
0073	First and last transfer	C a1	N	not used

Comment:

Example:
```
UNH+1+INVOIC:D:03A:UN:GMI012'
```

UN/EDIFACT Message: Segment details

Segment: **BGM**

Seq. No.: 2 Level: 0 **Beginning of message**
Status: M Max. Occ.: 1
Counter: 0020

Name: **Beginning of message**

Description of segment:

UN/EDIFACT			Implementation	
	Name	St Format	St Format	Use / Comments
BGM				
C002	Document/message name	C	R	
1001	Document name code	C an..3	R an..3	**Message Type, Coded** The following explanations are intended to support a unique usage of the different message types: Table of transaction types and their results: Used after agreement between Customer and the Transporter Transaction Seller Buyer --- Invoice S2B Credit Debit Credit Note S2B Debit Credit SBI Invoice B2S Credit Debit SBI Credit Note B2S Debit Credit B2S - Buyer(sender) to seller(receiver) S2B - Seller(sender) to buyer(receiver) It is strongly recommend to limit the usage according to the following table: Transaction Message type(s) --- Invoice S2B 380 Credit Note S2B 381 SBI Invoice B2S 389 **380 = Commercial invoice** **381 = Credit note** **389 = Self-billed invoice** Used after agreement between Customer and the Transporter
1131	Code list identification code	C an..17	N	not used
3055	Code list responsible agency code	C an..3	N	not used
1000	Document name	C an..35	N	not used
C106	Document/message identification	C	R	
1004	Document identifier	C an..35	R an..16	**Invoice/ credit note Number**
1056	Version identifier	C an..9	N	not used
1060	Revision identifier	C an..6	N	not used
1225	Message function code	C an..3	N	not used
4343	Response type code	C an..3	N	not used

Comment:

Example:

```
BGM+380+123456'
```

UN/EDIFACT Message: Segment details

Segment: **DTM** Seq. No.: 3 Level: 1 **Date/time/period**
Status: R Max. Occ.: 1
Counter: 0030

Name: **Message date**

Description of segment:

UN/EDIFACT			Implementation	
	Name	St Format	St Format	Use / Comments
DTM				
C507	Date/time/period	M	M	
2005	Date or time or period function code qualifier	M an..3	M an..3	**137 = Document/message date/time** The message date is perceived as synonym also for the invoice date.
2380	Date or time or period text	C an..35	R n..14	Document date
2379	Date or time or period format code	C an..3	R an..3	**102 = CCYYMMDD**

Comment:

Example:
```
DTM+137:20051231:102'
```

UN/EDIFACT Message: Segment details

Segment: **DTM**

Seq. No.: 4 Level: 1 **Date/time/period**
Status: D Max. Occ.: 1
Counter: 0030

Name: **Horizon start date**

Description of segment:

UN/EDIFACT			Implementation	
	Name	St Format	St Format	Use / Comments
DTM				
C507	Date/time/period	M	M	
2005	Date or time or period function code qualifier	M an..3	M an..3	**158 = Horizon start date** **194 = Start date/time** Note 158 and 194 are seen as synonymous.
2380	Date or time or period text	C an..35	R n..12	Horizon start date
2379	Date or time or period format code	C an..3	R an..3	**102 = CCYYMMDD**

Comment:
Horizon start date describes the first date of an invoicing target period forming a horizon.
Used for periodical invoices.

Example:
```
DTM+158:20041201:102'
```

UN/EDIFACT Message: Segment details

Segment: **DTM**

Seq. No.: 5 Level: 1 **Date/time/period**
Status: D Max. Occ.: 1
Counter: 0030

Name: **Horizon end date**

Description of segment:

UN/EDIFACT			Implementation	
	Name	St Format	St Format	Use / Comments
DTM				
C507	Date/time/period	M	M	
2005	Date or time or period function code qualifier	M an..3	M an..3	**159 = Horizon end date** **206 = End date/time** Note 159 and 206 are seen as synonymous.
2380	Date or time or period text	C an..35	R n..12	Horizon end date
2379	Date or time or period format code	C an..3	R an..3	**102 = CCYYMMDD**

Comment:
Horizon end date describes the last date of an invoicing target period forming a horizon.
Used for periodical invoices.

Example:
```
DTM+159:20041231:102'
```

UN/EDIFACT Message: Segment details

Segment: **FTX** Seq. No.: 6 Level: 1 **Free text**
Status: D Max. Occ.: 3
Counter: 0070

Name: **Legal info free text**

Description of segment:

UN/EDIFACT			Implementation	
	Name	St Format	St Format	Use / Comments
FTX				
4451	Text subject code qualifier	M an..3	M an..3	Free Text Qualifier **TXD = Tax declaration** **ABL = Government information** **REG = Regulatory information**
4453	Free text function code	C an..3	N	not used
C107	Text reference	C	N	
4441	Free text description code	M an..17	N	not used
1131	Code list identification code	C an..17	N	not used
3055	Code list responsible agency code	C an..3	N	not used
C108	Text literal	C	R	
4440	Free text	M an..512	M an..256	Free Text (Line 1)
4440	Free text	C an..512	O an..256	see 4440 # 1
4440	Free text	C an..512	O an..256	see 4440 # 1
4440	Free text	C an..512	O an..256	see 4440 # 1
4440	Free text	C an..512	O an..256	see 4440 # 1
3453	Language name code	C an..3	N	not used
4447	Free text format code	C an..3	N	not used

Comment:
Use when VAT EXEMPT as an alternative to tax exempt code in TAX/5305

Example:
```
FTX+TXD+++TAX EXEMPT INFO TEXT'
```

UN/EDIFACT Message: Segment details

Segment: **FTX** Seq. No.: 7 Level: 1 **Free text**
Status: C Max. Occ.: 2
Counter: 0070

Name: **Free text Invoice Instruction**

Description of segment:

UN/EDIFACT			Implementation	
	Name	St Format	St Format	Use / Comments
FTX				
4451	Text subject code qualifier	M an..3	M an..3	**INV = Invoice instruction** **AAI = General information**
4453	Free text function code	C an..3	N	not used
C107	Text reference	C	N	
4441	Free text description code	M an..17	N	not used
1131	Code list identification code	C an..17	N	not used
3055	Code list responsible agency code	C an..3	N	not used
C108	Text literal	C	R	
4440	Free text	M an..512	M an..70	
4440	Free text	C an..512	C an..70	
4440	Free text	C an..512	C an..70	
4440	Free text	C an..512	C an..70	
4440	Free text	C an..512	C an..70	
3453	Language name code	C an..3	N	not used
4447	Free text format code	C an..3	N	not used

Comment:

Example:
```
FTX+INV+++INVOICE INSTRUCTION'
```

UN/EDIFACT Message: Segment details

Group: **SG1** Status: O Max. Occ.: 13 Other Reference

Segment: **RFF** Seq. No.: 8 Level: 1 **Reference**
Status: M Max. Occ.: 1
Counter: 0130

Name: **Reference number**

Description of segment:

UN/EDIFACT			Implementation	
	Name	St Format	St Format	Use / Comments
RFF				
C506	Reference	M	M	
1153	Reference code qualifier	M an..3	M an..3	**AAO = Consignee's shipment reference number** **AAS = Transport document number** **CN = Carrier's reference number** **CR = Customer reference number** **CT = Contract number** **CU = Consignor's reference number** **FF = Freight forwarder's reference number** **IV = Invoice number** **UCN = Unique consignment reference number** **CRN = Conveyance reference number** **AUP = Consolidated orders' reference** **AEP = Project number** **CD = Credit note number**
1154	Reference identifier	C an..70	R an..70	
1156	Document line identifier	C an..6	N	not used
4000	Reference version identifier	C an..35	N	not used
1060	Revision identifier	C an..6	N	not used

Comment:

Example:
```
RFF+AEP:123'
```

UN/EDIFACT Message: Segment details

Group: **SG2** Status: R Max. Occ.: 1 Buyer

Segment: **NAD** Seq. No.: 9 Level: 1 **Name and address**
Status: M Max. Occ.: 1
Counter: 0230

Name: **Buyer**

Description of segment:

UN/EDIFACT			Implementation	
	Name	St Format	St Format	Use / Comments
NAD				
3035	Party function code qualifier	M an..3	M an..3	**BY = Buyer**
C082	Party identification details	C	R	
3039	Party identifier	M an..35	M an..35	Buyer's Identification Number
1131	Code list identification code	C an..17	N	not used
3055	Code list responsible agency code	C an..3	R an..3	**10 = ODETTE** **16 = US, D&B (Dun & Bradstreet Corporation)** **91 = Assigned by seller or seller's agent** **92 = Assigned by buyer or buyer's agent** **3 = IATA (International Air Transport Association)** **9 = EAN International** **11 = Lloyd's register of shipping** **12 = UIC (International union of railways)** **87 = Assigned by carrier**
C058	Name and address	C	N	
3124	Name and address description	M an..35	N	not used
3124	Name and address description	C an..35	N	not used
3124	Name and address description	C an..35	N	not used
3124	Name and address description	C an..35	N	not used
3124	Name and address description	C an..35	N	not used
C080	Party name	C	R	
3036	Party name	M an..35	M an..35	
3036	Party name	C an..35	D an..35	If more information is needed.
3036	Party name	C an..35	N	not used
3036	Party name	C an..35	N	not used
3036	Party name	C an..35	N	not used
3045	Party name format code	C an..3	N	not used
C059	Street	C	D	
3042	Street and number or post office box identifier	M an..35	M an..35	
3042	Street and number or post office box identifier	C an..35	D an..35	If more information is needed.
3042	Street and number or post office box identifier	C an..35	N	not used
3042	Street and number or post office box identifier	C an..35	N	not used
3164	City name	C an..35	R an..35	
C819	Country sub-entity details	C	N	
3229	Country sub-entity name code	C an..9	N	not used
1131	Code list identification code	C an..17	N	not used

UN/EDIFACT Message: Segment details

UN/EDIFACT			Implementation	
	Name	St Format	St Format	Use / Comments
3055	Code list responsible agency code	C an..3	N	not used
3228	Country sub-entity name	C an..70	N	not used
3251	Postal identification code	C an..17	R an..17	The Swedish post code is exchanged in unedited form(i.e it is to contain no spaces)
3207	Country name code	C an..3	D a2	If other qualifier than = 'SE'

Comment:

Example:
```
NAD+BY+1234567::91++COMPANY GMBH+SMALLROAD+SMALLTOWN++DE5409+DE'
```

UN/EDIFACT Message: Segment details

Group: **SG3** Status: O Max. Occ.: 4 Buyer's reference number(s)

Segment: **RFF** Seq. No.: 10 Level: 2 **Reference**
Status: R Max. Occ.: 1
Counter: 0280

Name: **Buyer's reference number(s)**

Description of segment:

UN/EDIFACT			Implementation	
	Name	St Format	St Format	Use / Comments
RFF				
C506	Reference	M	M	
1153	Reference code qualifier	M an..3	M an..3	**ADE = Account number** **XA = Company/place registration number** **IT = Internal customer number** **AHP = Tax registration number**
1154	Reference identifier	C an..70	R an..17	
1156	Document line identifier	C an..6	N	not used
4000	Reference version identifier	C an..35	N	not used
1060	Revision identifier	C an..6	N	not used

Comment:

Example:
RFF+ADE:7656444'

UN/EDIFACT Message: Segment details

Group: **SG3** Status: R Max. Occ.: 1 Buyer's VAT number

Segment: **RFF** Seq. No.: 11 Level: 2 **Reference**
Status: M Max. Occ.: 1
Counter: 0280

Name: **Buyer's reference number(s)**

Description of segment:

UN/EDIFACT			Implementation	
	Name	St Format	St Format	Use / Comments
RFF				
C506	Reference	M	M	
1153	Reference code qualifier	M an..3	M an..3	**VA = VAT registration number**
1154	Reference identifier	C an..70	R an..17	
1156	Document line identifier	C an..6	N	not used
4000	Reference version identifier	C an..35	N	not used
1060	Revision identifier	C an..6	N	not used

Comment:

Example:
RFF+VA:7656444'

UN/EDIFACT Message: Segment details

Group: **SG5** Status: O Max. Occ.: 1 Buyer's information contact

If available

Segment: **CTA** Seq. No.: 12 Level: 2 **Contact information**
Status: M Max. Occ.: 1
Counter: 0340

Name: **Contact information**

Description of segment:

UN/EDIFACT			Implementation	
	Name	St Format	St Format	Use / Comments
CTA				
3139	Contact function code	C an..3	R an..3	**IC = Information contact**
C056	Department or employee details	C	R	
3413	Department or employee name code	C an..17	D an..17	
3412	Department or employee name	C an..35	D an..35	

Comment:

Example:
```
CTA+IC+:LOGISTIC DEPARTMENT'
```

UN/EDIFACT Message: Segment details

Group: **SG5** Status: O Max. Occ.: 1 Buyer's information contact

If available

Segment: **COM** Seq. No.: 13 Level: 3 **Communication contact**
Status: O Max. Occ.: 5
Counter: 0350

Name: **Communication contact**

Description of segment:

UN/EDIFACT			Implementation	
	Name	St Format	St Format	Use / Comments
COM				
C076	Communication contact	M	M	
3148	Communication address identifier	M an..512	M an..100	The Communication codes is exchanged in unedited form(i.e it is to contain no spaces or hyphen)
3155	Communication address code qualifier	M an..3	M an..3	**AL = Cellular phone** **TE = Telephone** **FX = Telefax** **EM = Electronic mail**

Comment:

Example:
```
COM+0304356789:TE'
```

UN/EDIFACT Message: Segment details

Group: **SG2** Status: D Max. Occ.: 1 Invoicee

Segment: **NAD** Seq. No.: 14 Level: 1 **Name and address**
Status: M Max. Occ.: 1
Counter: 0230

Name: **Invoicee**

Description of segment:

UN/EDIFACT			Implementation	
	Name	St Format	St Format	Use / Comments
NAD				
3035	Party function code qualifier	M an..3	M an..3	**IV = Invoicee**
C082	Party identification details	C	R	
3039	Party identifier	M an..35	M an..35	
1131	Code list identification code	C an..17	N	not used
3055	Code list responsible agency code	C an..3	R an..3	**3 = IATA (International Air Transport Association)** **9 = EAN International** **10 = ODETTE** **11 = Lloyd's register of shipping** **12 = UIC (International union of railways)** **16 = US, D&B (Dun & Bradstreet Corporation)** **87 = Assigned by carrier** **91 = Assigned by seller or seller's agent** **92 = Assigned by buyer or buyer's agent**
C058	Name and address	C	N	
3124	Name and address description	M an..35	N	not used
3124	Name and address description	C an..35	N	not used
3124	Name and address description	C an..35	N	not used
3124	Name and address description	C an..35	N	not used
3124	Name and address description	C an..35	N	not used
C080	Party name	C	R	
3036	Party name	M an..35	M an..35	
3036	Party name	C an..35	O an..35	
3036	Party name	C an..35	N	not used
3036	Party name	C an..35	N	not used
3036	Party name	C an..35	N	not used
3045	Party name format code	C an..3	N	not used
C059	Street	C	D	If available
3042	Street and number or post office box identifier	M an..35	M an..35	
3042	Street and number or post office box identifier	C an..35	O an..35	
3042	Street and number or post office box identifier	C an..35	N	not used
3042	Street and number or post office box identifier	C an..35	N	not used
3164	City name	C an..35	R an..35	
C819	Country sub-entity details	C	N	
3229	Country sub-entity name code	C an..9	N	not used
1131	Code list identification code	C an..17	N	not used

UN/EDIFACT Message: Segment details

UN/EDIFACT			Implementation	
	Name	St Format	St Format	Use / Comments
3055	Code list responsible agency code	C an..3	N	not used
3228	Country sub-entity name	C an..70	N	not used
3251	Postal identification code	C an..17	R an..17	The Swedish post code is exchanged in unedited form (i.e it is to contain no spaces)
3207	Country name code	C an..3	D a2	If other qualifier than = 'SE'

Comment:

Example:
```
NAD+IV+1234567::91++COMPANY GMBH+SMALLROAD+SMALLTOWN++DE5409+DE'
```

UN/EDIFACT Message: Segment details

Group: **SG5** Status: O Max. Occ.: 1 Invoicee's information contact

Segment: **CTA** Seq. No.: 15 Level: 2 **Contact information**
Status: M Max. Occ.: 1
Counter: 0340

Name: **Contact information**

Description of segment:

UN/EDIFACT			Implementation	
	Name	St Format	St Format	Use / Comments
CTA				
3139	Contact function code	C an..3	R an..3	**IC = Information contact**
C056	Department or employee details	C	R	
3413	Department or employee name code	C an..17	D an..17	
3412	Department or employee name	C an..35	D an..35	

Comment:

Example:
```
CTA+IC+ACCOUNT CLERK:ACCOUNTING DEPT'
```

UN/EDIFACT Message: Segment details

Group: **SG5** Status: O Max. Occ.: 1 Invoicee's information contact

Segment: **COM** Seq. No.: 16 Level: 3 **Communication contact**
Status: D Max. Occ.: 5
Counter: 0350

Name: **Communication contact**

Description of segment:

UN/EDIFACT			Implementation	
	Name	St Format	St Format	Use / Comments
COM				
C076	Communication contact	M	M	
3148	Communication address identifier	M an..512	M an..100	Invoicee's Info. Contact Communication Means The Communication codes is exchanged in unedited form(i.e it is to contain no spaces or hyphen)
3155	Communication address code qualifier	M an..3	M an..3	**AL = Cellular phone** **TE = Telephone** **FX = Telefax** **EM = Electronic mail**

Comment:

Example:
```
COM+0309988766:TE'
```

UN/EDIFACT Message: Segment details

Group: **SG2** Status: R Max. Occ.: 1 Seller

Segment: **NAD** Seq. No.: 17 Level: 1 **Name and address**
Status: M Max. Occ.: 1
Counter: 0230

Name: **Seller**

Description of segment:

UN/EDIFACT			Implementation	
	Name	St Format	St Format	Use / Comments
NAD				
3035	Party function code qualifier	M an..3	M an..3	**SE = Seller** SE - party selling merchandise to a buyer.
C082	Party identification details	C	R	
3039	Party identifier	M an..35	R an..35	
1131	Code list identification code	C an..17	N	not used
3055	Code list responsible agency code	C an..3	R an..3	**10 = ODETTE** **16 = US, D&B (Dun & Bradstreet Corporation)** **91 = Assigned by seller or seller's agent** **92 = Assigned by buyer or buyer's agent** **3 = IATA (International Air Transport Association)** **9 = EAN International** **11 = Lloyd's register of shipping** **12 = UIC (International union of railways)** **87 = Assigned by carrier**
C058	Name and address	C	N	
3124	Name and address description	M an..35	N	not used
3124	Name and address description	C an..35	N	not used
3124	Name and address description	C an..35	N	not used
3124	Name and address description	C an..35	N	not used
3124	Name and address description	C an..35	N	not used
C080	Party name	C	R	
3036	Party name	M an..35	M an..35	
3036	Party name	C an..35	O an..35	
3036	Party name	C an..35	N	not used
3036	Party name	C an..35	N	not used
3036	Party name	C an..35	N	not used
3045	Party name format code	C an..3	N	not used
C059	Street	C	D	If available.
3042	Street and number or post office box identifier	M an..35	M an..35	Seller's Street Line
3042	Street and number or post office box identifier	C an..35	O an..35	
3042	Street and number or post office box identifier	C an..35	N	not used
3042	Street and number or post office box identifier	C an..35	N	not used
3164	City name	C an..35	R an..35	
C819	Country sub-entity details	C	N	
3229	Country sub-entity name code	C an..9	N	not used

UN/EDIFACT Message: Segment details

UN/EDIFACT			Implementation	
	Name	St Format	St Format	Use / Comments
1131	Code list identification code	C an..17	N	not used
3055	Code list responsible agency code	C an..3	N	not used
3228	Country sub-entity name	C an..70	N	not used
3251	Postal identification code	C an..17	R an..17	The Swedish post code is exchanged in unedited form (i.e it is to contain no spaces)
3207	Country name code	C an..3	D an..3	For usage see comment on C082. If other qualifier than = 'SE'

Comment:

Example:
```
NAD+SE+1234567::91++COMPANY GMBH+SMALLROAD+SMALLTOWN++DE5409+DE'
```

UN/EDIFACT Message: Segment details

Group: **SG2** Status: R Max. Occ.: 1 Seller

Segment: **FII** Seq. No.: 18 Level: 2 **Financial institution information**
Status: O Max. Occ.: 1
Counter: 0250

Name: **Seller's financial institution**

Description of segment:

UN/EDIFACT			Implementation	
	Name	St Format	St Format	Use / Comments
FII				
3035	Party function code qualifier	M an..3	M an..3	**RH = Seller's financial institution**
C078	Account holder identification	C	D	
3194	Account holder identifier	C an..35	R an..35	Account number (ex IBAN, Plus Giro, Bankgiro)
3192	Account holder name	C an..35	R an..35	
3192	Account holder name	C an..35	N	not used
6345	Currency identification code	C an..3	N	not used
C088	Institution identification	C	R	
3433	Institution name code	C an..11	O an..11	Bank identifier as assigned by S.W.I.F.T organisation. Or else as assigned by EAN: BG = Bankgiro; PG = Plusgiro
1131	Code list identification code	C an..17	N	not used
3055	Code list responsible agency code	C an..3	D an..3	**9 = EAN International** **17 = S.W.I.F.T.**
3434	Institution branch identifier	C an..17	O an..17	
1131	Code list identification code	C an..17	O an..17	
3055	Code list responsible agency code	C an..3	N	not used
3432	Institution name	C an..70	O an..35	Seller's Financial Institution Name
3436	Institution branch location name	C an..70	N	not used
3207	Country name code	C an..3	N	not used

Comment:

Example:
```
FII+RH+9943277711:NGEISS+KREDBEBB'
```

UN/EDIFACT Message: Segment details

Group: **SG3** Status: O Max. Occ.: 5 Seller's reference number(s)

Segment: **RFF** Seq. No.: 19 Level: 2 **Reference**
Status: M Max. Occ.: 1
Counter: 0280

Name: **Sellers's reference number(s)**

Description of segment:

UN/EDIFACT			Implementation	
	Name	St Format	St Format	Use / Comments
RFF				
C506	Reference	M	M	
1153	Reference code qualifier	M an..3	M an..3	**ADE = Account number** **XA = Company/place registration number** **AHP = Tax registration number** **CT = Contract number**
1154	Reference identifier	C an..70	R an..17	
1156	Document line identifier	C an..6	N	not used
4000	Reference version identifier	C an..35	N	not used
1060	Revision identifier	C an..6	N	not used

Comment:

Example:
RFF+ADE:765432'

UN/EDIFACT Message: Segment details

Group: **SG3** Status: D Max. Occ.: R Seller's VAT number

Segment: **RFF** Seq. No.: 20 Level: 2 **Reference**
Status: M Max. Occ.: 1
Counter: 0280

Name: **Sellers's reference number(s)**

Description of segment:

UN/EDIFACT			Implementation	
	Name	St Format	St Format	Use / Comments
RFF				
C506	Reference	M	M	
1153	Reference code qualifier	M an..3	M an..3	**VA = VAT registration number**
1154	Reference identifier	C an..70	R an..17	
1156	Document line identifier	C an..6	N	not used
4000	Reference version identifier	C an..35	N	not used
1060	Revision identifier	C an..6	N	not used

Comment:

Example:
RFF+VA:765432'

UN/EDIFACT Message: Segment details

Group: **SG5** Status: O Max. Occ.: 1 Accounting contact

Segment: **CTA** Seq. No.: 21 Level: 2 **Contact information**
Status: M Max. Occ.: 1
Counter: 0340

Name: **Accounting contact**

Description of segment:

UN/EDIFACT			Implementation	
	Name	St Format	St Format	Use / Comments
CTA				
3139	Contact function code	C an..3	R an..3	**AD = Accounting contact**
C056	Department or employee details	C	R	
3413	Department or employee name code	C an..17	D an..17	
3412	Department or employee name	C an..35	D an..35	

Comment:

Example:
```
CTA+AD+ACCOUNTING CLERK:ACCOUNTING DEPARTMENT'
```

UN/EDIFACT Message: Segment details

Group: **SG5** Status: O Max. Occ.: 1 Accounting contact

Segment: **COM** Seq. No.: 22 Level: 3 **Communication contact**
Status: O Max. Occ.: 5
Counter: 0350

Name: **Communication contact**

Description of segment:

UN/EDIFACT			Implementation	
	Name	St Format	St Format	Use / Comments
COM				
C076	Communication contact	M	M	
3148	Communication address identifier	M an..512	M an..100	The Communication codes is exchanged in unedited form(i.e it is to contain no spaces or hyphen)
3155	Communication address code qualifier	M an..3	M an..3	**TE = Telephone** **FX = Telefax** **EM = Electronic mail** **AL = Cellular phone**

Comment:

Example:
`COM+08977889966:TE'`

UN/EDIFACT Message: Segment details

Group: **SG5** Status: O Max. Occ.: 1 Information contact

Segment: **CTA** Seq. No.: 23 Level: 2 **Contact information**
Status: M Max. Occ.: 1
Counter: 0340

Name: **Contact information**

Description of segment:

UN/EDIFACT			Implementation	
	Name	St Format	St Format	Use / Comments
CTA				
3139	Contact function code	C an..3	R an..3	**IC = Information contact**
C056	Department or employee details	C	R	
3413	Department or employee name code	C an..17	D an..17	
3412	Department or employee name	C an..35	D an..35	

Comment:

Example:
```
CTA+IC+INFORMATION NAME:INFORMATION DEPARTMENT'
```

UN/EDIFACT Message: Segment details

Group: **SG5** Status: O Max. Occ.: 1 Information contact

Segment: **COM** Seq. No.: 24 Level: 3 **Communication contact**
Status: O Max. Occ.: 5
Counter: 0350

Name: **Communication contact**

Description of segment:

UN/EDIFACT			Implementation	
	Name	St Format	St Format	Use / Comments
COM				
C076	Communication contact	M	M	
3148	Communication address identifier	M an..512	M an..100	The Communication codes is exchanged in unedited form(i.e it is to contain no spaces or hyphen)
3155	Communication address code qualifier	M an..3	M an..3	**TE = Telephone** **FX = Telefax** **EM = Electronic mail** **AL = Cellular phone**

Comment:

Example:
```
COM+08977889966:TE'
```

UN/EDIFACT Message: Segment details

Group: **SG5** Status: O Max. Occ.: 1 Sales contact

Segment: **CTA** Seq. No.: 25 Level: 2 **Contact information**
Status: M Max. Occ.: 1
Counter: 0340

Name: **Contact information**

Description of segment:

UN/EDIFACT			Implementation	
	Name	St Format	St Format	Use / Comments
CTA				
3139	Contact function code	C an..3	R an..3	**SR = Sales representative or department**
C056	Department or employee details	C	R	
3413	Department or employee name code	C an..17	D an..17	
3412	Department or employee name	C an..35	D an..35	

Comment:

Example:
```
CTA+SR+SALES MAN:SALES DEPARTMENT'
```

UN/EDIFACT Message: Segment details

Group: **SG5** Status: O Max. Occ.: 1 Sales contact

Segment: **COM** Seq. No.: 26 Level: 3 **Communication contact**
Status: O Max. Occ.: 5
Counter: 0350

Name: **Communication contact**

Description of segment:

UN/EDIFACT			Implementation	
	Name	St Format	St Format	Use / Comments
COM				
C076	Communication contact	M	M	
3148	Communication address identifier	M an..512	M an..100	The Communication codes is exchanged in unedited form(i.e it is to contain no spaces or hyphen)
3155	Communication address code qualifier	M an..3	M an..3	**TE = Telephone** **FX = Telefax** **EM = Electronic mail** **AL = Cellular phone**

Comment:

Example:
```
COM+0708877456:AL'
```

UN/EDIFACT Message: Segment details

Group: **SG2** Status: D Max. Occ.: 1 Seller as officially registered

To be used when required in National Legislation.
Sellers Party as officially registered with government. Used when the goods and invoice are created from different countries and a legal agent is required in the country of the consignor.

Segment: **NAD** Seq. No.: 27 Level: 1 **Name and address**
Status: M Max. Occ.: 1
Counter: 0230

Name: **Seller's official address**

Description of segment:

UN/EDIFACT			Implementation	
	Name	St Format	St Format	Use / Comments
NAD				
3035	Party function code qualifier	M an..3	M an..3	**FH = Seller as officially registered**
C082	Party identification details	C	N	
3039	Party identifier	M an..35	N	not used
1131	Code list identification code	C an..17	N	not used
3055	Code list responsible agency code	C an..3	N	not used
C058	Name and address	C	M	
3124	Name and address description	M an..35	M an..35	
3124	Name and address description	C an..35	O an..35	see 3124 # 1
3124	Name and address description	C an..35	O an..35	see 3124 # 1
3124	Name and address description	C an..35	O an..35	see 3124 # 1
3124	Name and address description	C an..35	O an..35	see 3124 # 1
C080	Party name	C	D	
3036	Party name	M an..35	N	not used
3036	Party name	C an..35	O an..35	
3036	Party name	C an..35	N	not used
3036	Party name	C an..35	N	not used
3036	Party name	C an..35	N	not used
3045	Party name format code	C an..3	N	not used
C059	Street	C	D	
3042	Street and number or post office box identifier	M an..35	N	not used
3042	Street and number or post office box identifier	C an..35	O an..35	
3042	Street and number or post office box identifier	C an..35	N	not used
3042	Street and number or post office box identifier	C an..35	N	not used
3164	City name	C an..35	D an..35	
C819	Country sub-entity details	C	N	
3229	Country sub-entity name code	C an..9	N	not used
1131	Code list identification code	C an..17	N	not used
3055	Code list responsible agency code	C an..3	N	not used
3228	Country sub-entity name	C an..70	N	not used

UN/EDIFACT Message: Segment details

UN/EDIFACT			Implementation	
	Name	St Format	St Format	Use / Comments
3251	Postal identification code	C an..17	D an..17	
3207	Country name code	C an..3	D an..3	

Comment:
To be used when Required in National Legislation.

Example:
```
NAD+FH++Seller Inc.:Sample street 99:Sample town:DE-80559'
```

UN/EDIFACT Message: Segment details

Group: **SG3** Status: R Max. Occ.: 1 Sellers VAT Number

Segment: **RFF** Seq. No.: 28 Level: 2 **Reference**
Status: M Max. Occ.: 1
Counter: 0280

Name: **Sellers Official number(s)**

Description of segment:

UN/EDIFACT			Implementation	
	Name	St Format	St Format	Use / Comments
RFF				
C506	Reference	M	M	
1153	Reference code qualifier	M an..3	M an..3	**VA = VAT registration number** VA is required due to EU invoice direvtive
1154	Reference identifier	C an..70	R an..17	
1156	Document line identifier	C an..6	N	not used
4000	Reference version identifier	C an..35	N	not used
1060	Revision identifier	C an..6	N	not used

Comment:

Example:
RFF+VA:7656444'

UN/EDIFACT Message: Segment details

Group: **SG2** Status: D Max. Occ.: 1 Payee

If other than Seller. Inform your Buyer regarding this.

Segment: **NAD** Seq. No.: 29 Level: 1 **Name and address**
Status: M Max. Occ.: 1
Counter: 0230

Name: **Payee**

Description of segment:

UN/EDIFACT			Implementation	
	Name	St Format	St Format	Use / Comments
NAD				
3035	Party function code qualifier	M an..3	M an..3	**PE = Payee**
C082	Party identification details	C	R	
3039	Party identifier	M an..35	M an..35	
1131	Code list identification code	C an..17	N	not used
3055	Code list responsible agency code	C an..3	R an..3	**3 = IATA (International Air Transport Association)** **9 = EAN International** **10 = ODETTE** **11 = Lloyd's register of shipping** **12 = UIC (International union of railways)** **16 = US, D&B (Dun & Bradstreet Corporation)** **87 = Assigned by carrier** **91 = Assigned by seller or seller's agent** **92 = Assigned by buyer or buyer's agent**
C058	Name and address	C	N	
3124	Name and address description	M an..35	N	not used
3124	Name and address description	C an..35	N	not used
3124	Name and address description	C an..35	N	not used
3124	Name and address description	C an..35	N	not used
3124	Name and address description	C an..35	N	not used
C080	Party name	C	R	
3036	Party name	M an..35	M an..35	
3036	Party name	C an..35	O an..35	Payee's Name line 2
3036	Party name	C an..35	N	not used
3036	Party name	C an..35	N	not used
3036	Party name	C an..35	N	not used
3045	Party name format code	C an..3	N	not used
C059	Street	C	D	If available.
3042	Street and number or post office box identifier	M an..35	M an..35	
3042	Street and number or post office box identifier	C an..35	O an..35	Payee's Street Line 2
3042	Street and number or post office box identifier	C an..35	N	not used
3042	Street and number or post office box identifier	C an..35	N	not used
3164	City name	C an..35	R an..35	
C819	Country sub-entity details	C	O	

UN/EDIFACT Message: Segment details

UN/EDIFACT			Implementation	
	Name	St Format	St Format	Use / Comments
3229	Country sub-entity name code	C an..9	R an..9	
1131	Code list identification code	C an..17	N	not used
3055	Code list responsible agency code	C an..3	N	not used
3228	Country sub-entity name	C an..70	N	not used
3251	Postal identification code	C an..17	R an..17	The Swedish post code is exchanged in unedited form (i.e it is to contain no spaces)
3207	Country name code	C an..3	D an..3	If other qualifier than = 'SE'

Comment:

Example:
```
NAD+PE+1234567::91++COMPANY GMBH+SMALLROAD+SMALLTOWN++DE5409+DE'
```

UN/EDIFACT Message: Segment details

Group: **SG2** Status: D Max. Occ.: 1 Payee

If other than Seller. Inform your Buyer regarding this.

Segment: **FII** Seq. No.: 30 Level: 2 **Financial institution information**
Status: D Max. Occ.: 1
Counter: 0250

Name: **Pay-to's financial institution**

Description of segment:

UN/EDIFACT			Implementation	
	Name	St Format	St Format	Use / Comments
FII				
3035	Party function code qualifier	M an..3	M an..3	**BF = Beneficiary's bank**
C078	Account holder identification	C	O	
3194	Account holder identifier	C an..35	R an..35	Account number (ex IBAN, Plus Giro, Bankgiro)
3192	Account holder name	C an..35	C an..35	
3192	Account holder name	C an..35	N	not used
6345	Currency identification code	C an..3	N	not used
C088	Institution identification	C	O	
3433	Institution name code	C an..11	O an..11	Bank identifier as assigned by S.W.I.F.T organisation. Or else as assigned by EAN: BG = Bankgiro; PG = Plusgiro
1131	Code list identification code	C an..17	O an..17	
3055	Code list responsible agency code	C an..3	O an..3	**17 = S.W.I.F.T.** **9 = EAN International**
3434	Institution branch identifier	C an..17	O an..17	
1131	Code list identification code	C an..17	O an..17	
3055	Code list responsible agency code	C an..3	O an..3	
3432	Institution name	C an..70	O an..35	
3436	Institution branch location name	C an..70	N	not used
3207	Country name code	C an..3	N	not used

Comment:

Example:
```
FII+BF+9943277711:NGEISS+KREDBEBB'
```

UN/EDIFACT Message: Segment details

Group: **SG3** Status: R Max. Occ.: 4 Seller's reference number(s)

Segment: **RFF** Seq. No.: 31 Level: 2 **Reference**
Status: M Max. Occ.: 1
Counter: 0280

Name: **Payee's reference number(s)**

Description of segment:

UN/EDIFACT			Implementation	
	Name	St Format	St Format	Use / Comments
RFF				
C506	Reference	M	M	
1153	Reference code qualifier	M an..3	M an..3	**ADE = Account number** **VA = VAT registration number** **XA = Company/place registration number** **AHP = Tax registration number** **CT = Contract number**
1154	Reference identifier	C an..70	R an..17	
1156	Document line identifier	C an..6	N	not used
4000	Reference version identifier	C an..35	N	not used
1060	Revision identifier	C an..6	N	not used

Comment:

Example:
RFF+AP:765432'

UN/EDIFACT Message: Segment details

Group: **SG5** Status: O Max. Occ.: 1 Information contact

Segment: **CTA** Seq. No.: 32 Level: 2 **Contact information**
Status: M Max. Occ.: 1
Counter: 0340

Name: **Contact information**

Description of segment:

UN/EDIFACT			Implementation	
	Name	St Format	St Format	Use / Comments
CTA				
3139	Contact function code	C an..3	R an..3	**IC = Information contact**
C056	Department or employee details	C	R	
3413	Department or employee name code	C an..17	D an..17	
3412	Department or employee name	C an..35	D an..35	

Comment:

Example:
```
CTA+IC+CONTACT NAME:CONTACT DEPT'
```

UN/EDIFACT Message: Segment details

Group: **SG5** Status: O Max. Occ.: 1 Information contact

Segment: **COM** Seq. No.: 33 Level: 3 **Communication contact**
Status: O Max. Occ.: 5
Counter: 0350

Name: **Communication contact**

Description of segment:

UN/EDIFACT			Implementation	
	Name	St Format	St Format	Use / Comments
COM				
C076	Communication contact	M	M	
3148	Communication address identifier	M an..512	M an..100	The Communication codes is exchanged in unedited form(i.e it is to contain no spaces or hyphen)
3155	Communication address code qualifier	M an..3	M an..3	**TE = Telephone** **FX = Telefax** **EM = Electronic mail** **AL = Cellular phone**

Comment:

Example:
```
COM+08999887700:TE'
```

UN/EDIFACT Message: Segment details

Group: **SG2** Status: D Max. Occ.: 1 Tax representative party

Segment: **NAD** Seq. No.: 34 Level: 1 **Name and address**
Status: M Max. Occ.: 1
Counter: 0230

Name: **Tax representative**

Description of segment:

UN/EDIFACT			Implementation	
	Name	St Format	St Format	Use / Comments
NAD				
3035	Party function code qualifier	M an..3	M an..3	**LC = Party declaring the Value Added Tax (VAT)**
C082	Party identification details	C	N	
3039	Party identifier	M an..35	N	not used
1131	Code list identification code	C an..17	N	not used
3055	Code list responsible agency code	C an..3	N	not used
C058	Name and address	C	O	
3124	Name and address description	M an..35	M an..35	
3124	Name and address description	C an..35	O an..35	see 3124 # 1
3124	Name and address description	C an..35	O an..35	see 3124 # 1
3124	Name and address description	C an..35	O an..35	see 3124 # 1
3124	Name and address description	C an..35	O an..35	see 3124 # 1
C080	Party name	C	R	
3036	Party name	M an..35	M an..35	
3036	Party name	C an..35	O an..35	see 3036 # 1
3036	Party name	C an..35	N	not used
3036	Party name	C an..35	N	not used
3036	Party name	C an..35	N	not used
3045	Party name format code	C an..3	N	not used
C059	Street	C	O	
3042	Street and number or post office box identifier	M an..35	M an..35	
3042	Street and number or post office box identifier	C an..35	C an..35	see 3042 # 1
3042	Street and number or post office box identifier	C an..35	N	not used
3042	Street and number or post office box identifier	C an..35	N	not used
3164	City name	C an..35	O an..35	
C819	Country sub-entity details	C	O	
3229	Country sub-entity name code	C an..9	C an..9	
1131	Code list identification code	C an..17	N	not used
3055	Code list responsible agency code	C an..3	N	not used
3228	Country sub-entity name	C an..70	N	not used
3251	Postal identification code	C an..17	O an..17	
3207	Country name code	C an..3	O an..3	

UN/EDIFACT Message: Segment details

Comment:

Example:
```
NAD+LC+++ABC INC.+SMALL LANE 35+NEWTOWN++WC2-5CD+GB'
```

UN/EDIFACT Message: Segment details

Group: **SG3** Status: R Max. Occ.: 1 VAT registration number

Segment: **RFF** Seq. No.: 35 Level: 2 **Reference**
Status: M Max. Occ.: 1
Counter: 0280

Name: **Reference**

Description of segment:

UN/EDIFACT			Implementation	
	Name	St Format	St Format	Use / Comments
RFF				
C506	Reference	M	M	
1153	Reference code qualifier	M an..3	M an..3	**VA = VAT registration number**
1154	Reference identifier	C an..70	R an..17	
1156	Document line identifier	C an..6	N	not used
4000	Reference version identifier	C an..35	N	not used
1060	Revision identifier	C an..6	N	not used

Comment:

Example:
```
RFF+VA:GB 77766655'
```

UN/EDIFACT Message: Segment details

Group: **SG7** Status: R Max. Occ.: 2 Invoice Currency to Home, Invoice or Payment Currency

Segment: **CUX** Seq. No.: 36 Level: 1 **Currencies**
Status: M Max. Occ.: 1
Counter: 0410

Name: **Currencies**

Description of segment:

UN/EDIFACT			Implementation	
	Name	St Format	St Format	Use / Comments
CUX				
C504	Currency details	C	R	
6347	Currency usage code qualifier	M an..3	R an..3	**2 = Reference currency**
6345	Currency identification code	C an..3	R an..3	Invoicing currency Invoicing currency, coded according to ISO 4217 three alpha code.
6343	Currency type code qualifier	C an..3	R an..3	**4 = Invoicing currency**
6348	Currency rate	C n..4	N	not used
C504	Currency details	C	O	
6347	Currency usage code qualifier	M an..3	M an..3	**3 = Target currency**
6345	Currency identification code	C an..3	R an..3	Home or Payment currency, coded according to ISO 4217 three alpha code.
6343	Currency type code qualifier	C an..3	R an..3	Currency Purpose **3 = Home currency** **11 = Payment currency**
6348	Currency rate	C n..4	N	not used
5402	Currency exchange rate	C n..12	R n..12	Currency Conversion Rate
6341	Exchange rate currency market identifier	C an..3	N	not used

Comment:
One segment group is always required depending on business case.
SG7 First occurence:
In some countries it is a requirement that , for invoicing in foreign currency, the invoice taxable and tax (e.g VAT) amounts must also be expressed in home currency.
Relating this to the CUX segment, authorities would require the invoicing currency and home currency to be shown together with the rate of exchange(element 5402) used.
Some companies require the currency of the invoice to be present, If, then, only one currency applies to the invoice it may expressed as CUX+2:SEK:4+3:SEK:4:1' .
Calculation rule: Reference Currency multipled by rate = Target Currency

If more currencies have to be transmitted, another SG7 - CUX, DTM has to be created and rules for that are described in next CUX segment

Example:
```
CUX+2:EUR:4+3:SEK:11+9.987'
```

UN/EDIFACT Message: Segment details

Group: **SG7** Status: R Max. Occ.: 2 Invoice Currency to Home, Invoice or Payment Currency

Segment: **DTM** Seq. No.: 37 Level: 2 **Date/time/period**
Status: D Max. Occ.: 1
Counter: 0420

Name: **Exchange rate date**

Description of segment:

UN/EDIFACT			Implementation	
	Name	St Format	St Format	Use / Comments
DTM				
C507	Date/time/period	M	M	
2005	Date or time or period function code qualifier	M an..3	M an..3	**134 = Rate of exchange date/time**
2380	Date or time or period text	C an..35	R n8	Rate of Exchange Date
2379	Date or time or period format code	C an..3	R an..3	**102 = CCYYMMDD**

Comment:
The exchange rate date has to be specified only when payment currency is used in an invoice.

Example:
```
DTM+134:20051230:102'
```

UN/EDIFACT Message: Segment details

Group: **SG7** Status: O Max. Occ.: 1 Pricing Currency to Invoicing or Payment currency

Segment: **CUX** Seq. No.: 38 Level: 1 **Currencies**
Status: M Max. Occ.: R
Counter: 0410

Name: **Currencies**

Description of segment:

UN/EDIFACT			Implementation	
	Name	St Format	St Format	Use / Comments
CUX				
C504	Currency details	C	R	
6347	Currency usage code qualifier	M an..3	M an..3	**2 = Reference currency**
6345	Currency identification code	C an..3	R an..3	Invoicing currency Home, Invoicing or Payment currency, coded according to ISO 4217 three alpha code.
6343	Currency type code qualifier	C an..3	R an..3	**10 = Pricing currency**
6348	Currency rate	C n..4	N	not used
C504	Currency details	C	R	
6347	Currency usage code qualifier	M an..3	M an..3	**3 = Target currency**
6345	Currency identification code	C an..3	R an..3	Currency, coded according to ISO 4217 three alpha code.
6343	Currency type code qualifier	C an..3	R an..3	Currency Purpose **4 = Invoicing currency** **11 = Payment currency** Note that 4 =Invoicing currency and 11 = payment currency are to be understood as synonymous)
6348	Currency rate	C n..4	N	not used
5402	Currency exchange rate	C n..12	R n..12	Currency Conversion Rate
6341	Exchange rate currency market identifier	C an..3	N	not used

Comment:
SG7 Second occurrence is to be used depending on business case. Home currency: in some countries it is a requirement that, for invoicing in foreign currency, the invoice taxable and tax (e.g. VAT) amounts must also be expressed in home currency. Relating this to the CUX segment, authorities would require the invoicing currency and the home currency to be shown together with the rate of exchange(element 5402) used. Calculation rule:
Reference Currency multipled by rate = Target Currency.
This segment is used for conversion of cost in other currencies into invoicing currency.

Example:
```
CUX+2:EUR:10+3:SEK:4+0.11'
```

UN/EDIFACT Message: Segment details

Group: **SG7** Status: O Max. Occ.: 1 Pricing Currency to Invoicing or Payment currency

Segment: **DTM** Seq. No.: 39 Level: 2 **Date/time/period**
Status: D Max. Occ.: 1
Counter: 0420

Name: **Exchange rate date**

Description of segment:

UN/EDIFACT			Implementation	
	Name	St Format	St Format	Use / Comments
DTM				
C507	Date/time/period	M	M	
2005	Date or time or period function code qualifier	M an..3	M an..3	**134 = Rate of exchange date/time**
2380	Date or time or period text	C an..35	R n8	Rate of Exchange Date
2379	Date or time or period format code	C an..3	R an..3	**102 = CCYYMMDD**

Comment:
The exchange rate date has to be specified only when payment currency is used in an invoice.

Example:
```
DTM+134:20051230:102'
```

UN/EDIFACT Message: Segment details

Group: **SG8** Status: D Max. Occ.: 10 Payment instructions

Segment: **PYT** Seq. No.: 40 Level: 1 **Payment terms**
Status: M Max. Occ.: 1
Counter: 0440

Name: **Payment terms**

Description of segment:

UN/EDIFACT			Implementation	
	Name	St Format	St Format	Use / Comments
PYT				
4279	Payment terms type code qualifier	M an..3	M an..3	**1 = Basic** **3 = Fixed date** **7 = Extended** **20 = Penalty terms** **78 = Factoring**
C019	Payment terms	C	N	
4277	Payment terms description identifier	C an..17	N	not used
1131	Code list identification code	C an..17	N	not used
3055	Code list responsible agency code	C an..3	N	not used
4276	Payment terms description	C an..35	N	not used
2475	Time reference code	C an..3	R an..3	**66 = Specified date**
2009	Terms time relation code	C an..3	N	not used
2151	Period type code	C an..3	N	not used
2152	Period count quantity	C n..3	N	not used

Comment:

Example:
```
PYT+1++66'
```

UN/EDIFACT Message: Segment details

Group: **SG8** Status: D Max. Occ.: 10 Payment instructions

Segment: **DTM** Seq. No.: 41 Level: 2 **Date/time/period**
Status: R Max. Occ.: 1
Counter: 0450

Name: **Payment due date**

Description of segment:

UN/EDIFACT			Implementation	
	Name	St Format	St Format	Use / Comments
DTM				
C507	Date/time/period	M	M	
2005	Date or time or period function code qualifier	M an..3	M an..3	**140 = Payment due date**
2380	Date or time or period text	C an..35	R n8	
2379	Date or time or period format code	C an..3	R an..3	**102 = CCYYMMDD**

Comment:
This segment can be used in conjunction with the applicable qualifier in the leading PYT segment.

Example:
```
DTM+140:20040110:102'
```

UN/EDIFACT Message: Segment details

Group: **SG8** Status: D Max. Occ.: 10 Payment instructions

Segment: **PCD** Seq. No.: 42 Level: 2 **Percentage details**
Status: D Max. Occ.: 1
Counter: 0460

Name: **Payment percentage**

Description of segment:

UN/EDIFACT			Implementation	
	Name	St Format	St Format	Use / Comments
PCD				
C501	Percentage details	M	M	
5245	Percentage type code qualifier	M an..3	M an..3	Payment Variation Qualifier **15 = Penalty percentage**
5482	Percentage	C n..10	R n..10	Payment Variation
5249	Percentage basis identification code	C an..3	N	not used
1131	Code list identification code	C an..17	N	not used
3055	Code list responsible agency code	C an..3	N	not used
4405	Status description code	C an..3	N	not used

Comment:

Example:
```
PCD+15:2'
```

UN/EDIFACT Message: Segment details

Group: **SG12** Status: C Max. Occ.: 1 TOD-LOC

Segment: **TOD** Seq. No.: 43 Level: 1 **Terms of delivery or transport**
Status: M Max. Occ.: 1
Counter: 0600

Name: **Terms of delivery or transport**

Description of segment:

UN/EDIFACT			Implementation	
	Name	St Format	St Format	Use / Comments
TOD				
4055	Delivery or transport terms function code	C an..3	R an..3	**6 = Delivery condition**
4215	Transport charges payment method code	C an..3	N	not used
C100	Terms of delivery or transport	C	R	
4053	Delivery or transport terms description code	C an..3	R an..3	**CFR = Cost and Freight** **CIF = Cost, Insurance, Freight (... named port of destination)** **CIP = Carriage and Insurance Paid to (... named place of destination)** **CPT = Carriage Paid To (... named place of destination)** **DAF = Delivered At frontier (... named place)** **DDP = Delivered Duty Paid (... named place of destination)** **DDU = Delivered Duty Unpaid (... named place of destination)** **DEQ = Delivered Ex Quay (Duty paid) (... named port of destination)** **DES = Delivered Ex Ship (... named port of destination)** **EXW = Ex Works (... named place)** **FAS = Free Along Ship (... named port of shipment)** **FCA = Free Carrier (... named place)** **FOB = Free On Board (... named port of shipment)**
1131	Code list identification code	C an..17	D an..17	Value omitted: implies Incoterms 2000. ZCT = Combiterms
3055	Code list responsible agency code	C an..3	N	not used
4052	Delivery or transport terms description	C an..70	N	not used
4052	Delivery or transport terms description	C an..70	N	not used

Comment:

Example:
```
TOD+6++CFR'
```

UN/EDIFACT Message: Segment details

Group: **SG12** Status: C Max. Occ.: 1 TOD-LOC

Segment: **LOC** Seq. No.: 44 Level: 2 **Place/location identification**
Status: C Max. Occ.: 1
Counter: 0610

Name: **Place/location identification**

Description of segment:

UN/EDIFACT			Implementation	
	Name	St Format	St Format	Use / Comments
LOC				
3227	Location function code qualifier	M an..3	M an..3	**1 = Place of terms of delivery**
C517	Location identification	C	R	
3225	Location name code	C an..35	D an..35	UN/LOCODE (default)
1131	Code list identification code	C an..17	D an..17	Value omitted: implies code is UN/LOCODE
3055	Code list responsible agency code	C an..3	D an..3	
3224	Location name	C an..256	D an..256	
C519	Related location one identification	C	N	
3223	First related location name code	C an..25	N	not used
1131	Code list identification code	C an..17	N	not used
3055	Code list responsible agency code	C an..3	N	not used
3222	First related location name	C an..70	N	not used
C553	Related location two identification	C	N	
3233	Second related location name code	C an..25	N	not used
1131	Code list identification code	C an..17	N	not used
3055	Code list responsible agency code	C an..3	N	not used
3232	Second related location name	C an..70	N	not used
5479	Relation code	C an..3	N	not used

Comment:

Example:
LOC+1+BRAÅS'

UN/EDIFACT Message: Segment details

Group: **SG16** Status: C Max. Occ.: 9999 Allowances / Charges

Segment: **ALC** Seq. No.: 45 Level: 1 **Allowance or charge**
Status: M Max. Occ.: 1
Counter: 0750

Name: **Allowance or charge**

Description of segment:

UN/EDIFACT			Implementation	
	Name	St Format	St Format	Use / Comments
ALC				
5463	Allowance or charge code qualifier	M an..3	M an..3	**A = Allowance** **C = Charge**
C552	Allowance/charge information	C	N	
1230	Allowance or charge identifier	C an..35	N	not used
5189	Allowance or charge identification code	C an..3	N	not used
4471	Settlement means code	C an..3	O an..3	**2 = Off invoice** **6 = Charge to be paid by customer**
1227	Calculation sequence code	C an..3	O an..3	**1 = First step of calculation** **2 = Second step of calculation** **3 = Third step of calculation** **4 = Fourth step of calculation**
C214	Special services identification	C	R	
7161	Special service description code	C an..3	R an..3	Use Carrier's Allowance and charge list. http://www.swedfreight.se/Documents/eCom/Kodlistor/fraktkostnadskoder.pdf
1131	Code list identification code	C an..17	N	not used
3055	Code list responsible agency code	C an..3	R an..3	**6 = UN/ECE (United Nations - Economic Commission for Europe)** **10 = ODETTE** **87 = Assigned by carrier** **91 = Assigned by seller or seller's agent**
7160	Special service description	C an..35	D an..35	Use this element to describe 7161 miscellaneous
7160	Special service description	C an..35	C an..35	

Comment:

Example:
```
ALC+A++2+1+FAC::87'
```

UN/EDIFACT Message: Segment details

Group: **SG20** Status: C Max. Occ.: 2 MOA

Segment: **MOA** Seq. No.: 46 Level: 2 **Monetary amount**
Status: M Max. Occ.: 1
Counter: 0880

Name: **Monetary amount**

Description of segment:

UN/EDIFACT			Implementation	
	Name	St Format	St Format	Use / Comments
MOA				
C516	Monetary amount	M	M	
5025	Monetary amount type code qualifier	M an..3	M an..3	**8 = Allowance or charge amount**
5004	Monetary amount	C n..35	R n..15	
6345	Currency identification code	C an..3	O an..3	For currency, one may also refer to CUX segment (invoice currency)
6343	Currency type code qualifier	C an..3	O an..3	Note that 4 =Invoicing currency and 11 = payment currency are to be understood as synonymous) **4 = Invoicing currency** **11 = Payment currency**
4405	Status description code	C an..3	N	not used

Comment:

Example:
```
MOA+8:25:SEK:11'
```

UN/EDIFACT Message: Segment details

Group: **SG22** Status: O Max. Occ.: 5 Tax

Segment: **TAX** Seq. No.: 47 Level: 2 **Duty/tax/fee details**
Status: M Max. Occ.: 1
Counter: 0960

Name: **Duty/tax/fee details**

Description of segment:

UN/EDIFACT			Implementation	
	Name	St Format	St Format	Use / Comments
TAX				
5283	Duty or tax or fee function code qualifier	M an..3	M an..3	**7 = Tax**
C241	Duty/tax/fee type	C	R	
5153	Duty or tax or fee type name code	C an..3	R an..3	Code OTH shall be used when the tax in question is not VAT. **AAG = Harmonised sales tax, Canadian** **AAH = Quebec sales tax** **AAI = Canadian provincial sales tax** **BOL = Stamp duty (Imposta di Bollo)** **GST = Goods and services tax** **LOC = Local sales tax** **OTH = Other taxes** **STT = State/provincial sales tax** **VAT = Value added tax**
1131	Code list identification code	C an..17	N	not used
3055	Code list responsible agency code	C an..3	N	not used
5152	Duty or tax or fee type name	C an..35	N	not used
C533	Duty/tax/fee account detail	C	N	
5289	Duty or tax or fee account code	M an..6	N	not used
1131	Code list identification code	C an..17	N	not used
3055	Code list responsible agency code	C an..3	N	not used
5286	Duty or tax or fee assessment basis quantity	C an..15	N	not used
C243	Duty/tax/fee detail	C	C	
5279	Duty or tax or fee rate code	C an..7	N	not used
1131	Code list identification code	C an..17	N	not used
3055	Code list responsible agency code	C an..3	N	not used
5278	Duty or tax or fee rate	C an..17	R an..17	The tax rate (numeric) should be presented as follows: 19.5% ==> :19.5
5273	Duty or tax or fee rate basis code	C an..12	N	not used
1131	Code list identification code	C an..17	N	not used
3055	Code list responsible agency code	C an..3	N	not used
5305	Duty or tax or fee category code	C an..3	R an..3	**E = Exempt from tax** **S = Standard rate** **Z = Zero rated goods** **AAA = Exempt - Article 15 of Directive 77/388/EC** **AAB = Exempt - Article 16 of Directive 77/388/EC** **AAE = Exempt - Article 28b(C)** **AAL = Reverse Charge - 2nd subparagraph of Article 16(1) of Directive 77/388/EC**

UN/EDIFACT Message: Segment details

UN/EDIFACT			Implementation	
	Name	St Format	St Format	Use / Comments
3446	Party tax identifier	C an..20	N	not used
1227	Calculation sequence code	C an..3	N	not used

Comment:

Example:
TAX+7+VAT+++:::16+S'

UN/EDIFACT Message: Segment details

Group: **SG22** Status: O Max. Occ.: 5 Tax

Segment: **MOA** Seq. No.: 48 Level: 3 **Monetary amount**
Status: R Max. Occ.: 1
Counter: 0970

Name: **Monetary amount**

Description of segment:

UN/EDIFACT			Implementation	
	Name	St Format	St Format	Use / Comments
MOA				
C516	Monetary amount	M	M	
5025	Monetary amount type code qualifier	M an..3	M an..3	**124 = Tax amount**
5004	Monetary amount	C n..35	R n..15	
6345	Currency identification code	C an..3	O an..3	For currency, one may also refer to CUX segment (invoice currency)
6343	Currency type code qualifier	C an..3	O an..3	Note that 4 =Invoicing currency and 11 = payment currency are to be understood as synonymous) **4 = Invoicing currency** **11 = Payment currency**
4405	Status description code	C an..3	N	not used

Comment:

Example:
```
MOA+124:1100:SEK:11'
```

UN/EDIFACT Message: Segment details

Group: **SG26** Status: R Max. Occ.: 9999999 Line item section

Segment: **LIN** Seq. No.: 49 Level: 1 **Line item**
Status: M Max. Occ.: 1
Counter: 1100

Name: **Line item**

Description of segment:

UN/EDIFACT			Implementation	
	Name	St Format	St Format	Use / Comments
LIN				
1082	Line item identifier	C an..6	R an..6	
1229	Action request/notification description code	C an..3	N	not used
C212	Item number identification	C	N	
7140	Item identifier	C an..35	N	not used
7143	Item type identification code	C an..3	N	not used
1131	Code list identification code	C an..17	N	not used
3055	Code list responsible agency code	C an..3	N	not used
C829	Sub-line information	C	N	
5495	Sub-line indicator code	C an..3	N	not used
1082	Line item identifier	C an..6	N	not used
1222	Configuration level number	C n..2	N	not used
7083	Configuration operation code	C an..3	N	not used

Comment:

Example:
```
LIN+1'
```

UN/EDIFACT Message: Segment details

Group: **SG26** Status: R Max. Occ.: 9999999 Line item section

Segment: **MEA** Seq. No.: 50 Level: 2 **Measurements**
Status: O Max. Occ.: 5
Counter: 1140

Name: **Dimensions**

Description of segment:

UN/EDIFACT			Implementation	
	Name	St Format	St Format	Use / Comments
MEA				
6311	Measurement purpose code qualifier	M an..3	M an..3	**PD = Physical dimensions (product ordered)**
C502	Measurement details	C	R	
6313	Measured attribute code	C an..3	R an..3	**DI = Diameter** **HT = Height dimension** **LN = Length dimension** **TH = Thickness** **WD = Width dimension** **AAC = Total net weight** **AAD = Total gross weight** **ACV = Loading meters** **AAW = Gross volume**
6321	Measurement significance code	C an..3	N	not used
6155	Non-discrete measurement name code	C an..17	N	not used
6154	Non-discrete measurement name	C an..70	N	not used
C174	Value/range	C	R	
6411	Measurement unit code	M an..8	M an..8	**MTR = metre** **KGM = kilogram** **MTQ = cubic metre** **LTR = litre** **TNE = tonne (metric ton)**
6314	Measure	C an..18	R an..18	
6162	Range minimum quantity	C n..18	N	not used
6152	Range maximum quantity	C n..18	N	not used
6432	Significant digits quantity	C n..2	N	not used
7383	Surface or layer code	C an..3	N	not used

Comment:

Example:
```
MEA+PD+DI+MTQ:3,5'
```

UN/EDIFACT Message: Segment details

Group: **SG26** Status: R Max. Occ.: 9999999 Line item section

Segment: **QTY** Seq. No.: 51 Level: 2 **Quantity**
Status: O Max. Occ.: 4
Counter: 1150

Name: **Quantities**

Description of segment:

UN/EDIFACT			Implementation	
	Name	St Format	St Format	Use / Comments
QTY				
C186	Quantity details	M	M	
6063	Quantity type code qualifier	M an..3	M an..3	**124 = Damaged goods** **194 = Received and accepted** **21 = Ordered quantity** **49 = Chargeable distance** **100 = Chargeable weight** **101 = Chargeable gross weight** **102 = Chargeable tare weight** **103 = Chargeable number of axles** **104 = Chargeable number of containers** **105 = Chargeable number of rail wagons** **106 = Chargeable number of packages** **107 = Chargeable number of units** **108 = Chargeable period** **109 = Chargeable volume** Z01 = Chargable number of trailers **111 = Chargeable surface** **112 = Chargeable length**
6060	Quantity	M an..35	M n..15	
6411	Measurement unit code	C an..8	R an..3	**DAY = day** **HUR = hour** **KGM = kilogram** **KTM = kilometre** **LTR = litre** **MON = month** **MTK = square metre** **MTQ = cubic metre** **MTR = metre** **TNE = tonne (metric ton)** **WEE = week** **C62 = one** PCE=C62

Comment:

Example:
```
QTY+21:1:C62'
```

UN/EDIFACT Message: Segment details

Group: **SG26** Status: R Max. Occ.: 9999999 Line item section

Segment: **DTM** Seq. No.: 52 Level: 2 **Date/time/period**
Status: O Max. Occ.: 1
Counter: 1180

Name: **Goods receipt date**

Description of segment:

UN/EDIFACT			Implementation	
	Name	St Format	St Format	Use / Comments
DTM				
C507	Date/time/period	M	M	
2005	Date or time or period function code qualifier	M an..3	M an..3	**50 = Goods receipt date/time**
2380	Date or time or period text	C an..35	R an..14	
2379	Date or time or period format code	C an..3	O an..3	**102 = CCYYMMDD** **203 = CCYYMMDDHHMM**

Comment:

Example:
```
DTM+50:20041214:102'
```

UN/EDIFACT Message: Segment details

Group: **SG26** Status: R Max. Occ.: 9999999 Line item section

Segment: **DTM** Seq. No.: 53 Level: 2 **Date/time/period**
Status: O Max. Occ.: 1
Counter: 1180

Name: **Acceptance date**

Description of segment:

UN/EDIFACT			Implementation	
	Name	St Format	St Format	Use / Comments
DTM				
C507	Date/time/period	M	M	
2005	Date or time or period function code qualifier	M an..3	M an..3	**143 = Acceptance date/time of goods**
2380	Date or time or period text	C an..35	R an..35	
2379	Date or time or period format code	C an..3	O an..3	**102 = CCYYMMDD** **203 = CCYYMMDDHHMM**

Comment:

Example:
```
DTM+143:20040812:102'
```

UN/EDIFACT Message: Segment details

Group: **SG26** Status: R Max. Occ.: 9999999 Line item section

Segment: **DTM** Seq. No.: 54 Level: 2 **Date/time/period**
Status: D Max. Occ.: 5
Counter: 1180

Name: **Other Dates**

Description of segment:

UN/EDIFACT			Implementation	
	Name	St Format	St Format	Use / Comments
DTM				
C507	Date/time/period	M	M	
2005	Date or time or period function code qualifier	M an..3	M an..3	**7 = Effective from date/time** **35 = Delivery date/time, actual** **136 = Transport means departure date/time** **155 = Accounting period start date** **156 = Accounting period end date** **178 = Transport means arrival date/time, actual** **131 = Tax point date** **597 = Registration date**
2380	Date or time or period text	C an..35	R n..14	
2379	Date or time or period format code	C an..3	R an..3	**102 = CCYYMMDD** **203 = CCYYMMDDHHMM**

Comment:

Example:
```
DTM+35:20041205:102'
```

UN/EDIFACT Message: Segment details

Group: **SG26** Status: R Max. Occ.: 9999999 Line item section

Segment: **GIN** Seq. No.: 55 Level: 2 **Goods identity number**
Status: O Max. Occ.: 1000
Counter: 1190

Name: **Goods identity number**

Description of segment:

UN/EDIFACT			Implementation	
	Name	St Format	St Format	Use / Comments
GIN				
7405	Object identification code qualifier	M an..3	M an..3	**BN = Serial number** **VV = Vehicle identity number** **AW = Serial shipping container code** **ML = Marking/label number**
C208	Identity number range	M	M	
7402	Object identifier	M an..35	R an..35	
7402	Object identifier	C an..35	N	not used
C208	Identity number range	C	N	
7402	Object identifier	M an..35	N	not used
7402	Object identifier	C an..35	N	not used
C208	Identity number range	C	N	
7402	Object identifier	M an..35	N	not used
7402	Object identifier	C an..35	N	not used
C208	Identity number range	C	N	
7402	Object identifier	M an..35	N	not used
7402	Object identifier	C an..35	N	not used
C208	Identity number range	C	N	
7402	Object identifier	M an..35	N	not used
7402	Object identifier	C an..35	N	not used

Comment:

Example:
```
GIN+BN+SN1234567890'
```

UN/EDIFACT Message: Segment details

Group: **SG26** Status: R Max. Occ.: 9999999 Line item section

Segment: **FTX** Seq. No.: 56 Level: 2 **Free text**
Status: O Max. Occ.: 10
Counter: 1230

Name: **Free text information**

Description of segment:

UN/EDIFACT			Implementation	
	Name	St Format	St Format	Use / Comments
FTX				
4451	Text subject code qualifier	M an..3	M an..3	**TRA = Transportation information** **AAA = Goods description** **INV = Invoice instruction** **MKS = Additional marks/numbers information** **TXD = Tax declaration** **EUR = Effective used routing** **SSR = Special service request** (SSR = To be used when carrier is to compile data for Swedish transport subsidiary application)
4453	Free text function code	C an..3	R an..3	Code = 1
C107	Text reference	C	D	Dependent on 4451
4441	Free text description code	M an..17	M an..17	
1131	Code list identification code	C an..17	N	not used
3055	Code list responsible agency code	C an..3	C an..3	**87 = Assigned by carrier**
C108	Text literal	C	R	
4440	Free text	M an..512	R an..256	
4440	Free text	C an..512	O an..256	see 4440 # 1
4440	Free text	C an..512	O an..256	see 4440 # 1
4440	Free text	C an..512	O an..256	see 4440 # 1
4440	Free text	C an..512	O an..256	see 4440 # 1
3453	Language name code	C an..3	N	not used
4447	Free text format code	C an..3	N	not used

Comment:

Example:
```
FTX+TRA+1+Z13::87+TERMS OF DELIVERY DESCRIPTION'
```

UN/EDIFACT Message: Segment details

Group: **SG27** Status: O Max. Occ.: 7 Line item net amount

Segment: **MOA** Seq. No.: 57 Level: 2 **Monetary amount**
Status: M Max. Occ.: 1
Counter: 1260

Name: **Line item net amount in invoice currency**

Description of segment:

UN/EDIFACT			Implementation	
	Name	St Format	St Format	Use / Comments
MOA				
C516	Monetary amount	M	M	
5025	Monetary amount type code qualifier	M an..3	M an..3	**203 = Line item amount**
5004	Monetary amount	C n..35	R n..15	
6345	Currency identification code	C an..3	O an..3	For currency, one may also refer to CUX segment (invoice currency)
6343	Currency type code qualifier	C an..3	O an..3	**4 = Invoicing currency** **11 = Payment currency** Note that 4 =Invoicing currency and 11 = payment currency are to be understood as synonymous
4405	Status description code	C an..3	N	not used

Comment:
The line item amount is the total related to this line item. It includes rebates and additions but excludes payment discount and VAT.

Example:
```
MOA+203:1100:SEK:11'
```

UN/EDIFACT Message: Segment details

Group: **SG27** Status: O Max. Occ.: 1 Line Unit Price

Segment: **MOA** Seq. No.: 58 Level: 2 **Monetary amount**
Status: M Max. Occ.: 1
Counter: 1260

Name: **Line Unit Price in invoicing currency**

Description of segment:

UN/EDIFACT			Implementation	
	Name	St Format	St Format	Use / Comments
MOA				
C516	Monetary amount	M	M	
5025	Monetary amount type code qualifier	M an..3	M an..3	**146 = Unit price**
5004	Monetary amount	C n..35	R n..15	
6345	Currency identification code	C an..3	O an..3	For currency, one may also refer to CUX segment (invoice currency)
6343	Currency type code qualifier	C an..3	O an..3	**4 = Invoicing currency** **11 = Payment currency** Note that 4 =Invoicing currency and 11 = payment currency are to be understood as synonymous
4405	Status description code	C an..3	N	not used

Comment:

Example:
```
MOA+146:1100:SEK:11'
```

UN/EDIFACT Message: Segment details

Group: **SG27** Status: O Max. Occ.: 1 Amount in reference value

Segment: **MOA** Seq. No.: 59 Level: 2 **Monetary amount**
Status: M Max. Occ.: 1
Counter: 1260

Name: **Amount in reference currency**

Description of segment:

UN/EDIFACT			Implementation	
	Name	St Format	St Format	Use / Comments
MOA				
C516	Monetary amount	M	M	
5025	Monetary amount type code qualifier	M an..3	M an..3	**6 = Amount reference currency**
5004	Monetary amount	C n..35	R n..15	
6345	Currency identification code	C an..3	O an..3	For currency, one may also refer to CUX segment (invoice currency) May be an other currency than those shown in CUX.
6343	Currency type code qualifier	C an..3	O an..3	**4 = Invoicing currency** **11 = Payment currency** Note that 4 =Invoicing currency and 11 = payment currency are to be understood as synonymous
4405	Status description code	C an..3	N	not used

Comment:
Reference Amount for example (Customs declaration, for other outlays in other currency than invoicing.

Example:
```
MOA+6:1100:EUR'
```

UN/EDIFACT Message: Segment details

Group: **SG30** Status: O Max. Occ.: 10 References to messages

Segment: **RFF** Seq. No.: 60 Level: 2 **Reference**
Status: M Max. Occ.: 1
Counter: 1400

Name: **Reference message number**

Description of segment:

UN/EDIFACT			Implementation	
	Name	St Format	St Format	Use / Comments
RFF				
C506	Reference	M	M	
1153	Reference code qualifier	M an..3	R an..3	**ABT = Customs declaration number** **ADE = Account number** **AAO = Consignee's shipment reference number** **AAS = Transport document number** **CN = Carrier's reference number** **CR = Customer reference number** **CT = Contract number** **CU = Consignor's reference number** **FF = Freight forwarder's reference number** **SZ = Specification number** **UCN = Unique consignment reference number**
1154	Reference identifier	C an..70	R an..70	
1156	Document line identifier	C an..6	O n..6	
4000	Reference version identifier	C an..35	N	not used
1060	Revision identifier	C an..6	N	not used

Comment:

Example:
```
RFF+CN:333444:10'
```

UN/EDIFACT Message: Segment details

Group: **SG31** Status: O Max. Occ.: 10 Packaging information

Segment: **PAC** Seq. No.: 61 Level: 2 **Package**
Status: M Max. Occ.: 1
Counter: 1430

Name: **Package**

Description of segment:

UN/EDIFACT			Implementation	
	Name	St Format	St Format	Use / Comments
PAC				
7224	Package quantity	C n..8	R n..8	
C531	Packaging details	C	N	
7075	Packaging level code	C an..3	N	not used
7233	Packaging related description code	C an..3	N	not used
7073	Packaging terms and conditions code	C an..3	N	not used
C202	Package type	C	D	
7065	Package type description code	C an..17	D an..17	Use UN/ECE recommendation 021
1131	Code list identification code	C an..17	N	not used
3055	Code list responsible agency code	C an..3	N	not used
7064	Type of packages	C an..35	D an..35	If element 7065 is not used.
C402	Package type identification	C	N	
7077	Description format code	M an..3	N	not used
7064	Type of packages	M an..35	N	not used
7143	Item type identification code	C an..3	N	not used
7064	Type of packages	C an..35	N	not used
7143	Item type identification code	C an..3	N	not used
C532	Returnable package details	C	N	
8395	Returnable package freight payment responsibility code	C an..3	N	not used
8393	Returnable package load contents code	C an..3	N	not used

Comment:

Example:
```
PAC+1++L4'
```

UN/EDIFACT Message: Segment details

Group: **SG33** Status: O Max. Occ.: 10 Related location(s)

Segment: **LOC** Seq. No.: 62 Level: 2 **Place/location identification**
Status: M Max. Occ.: 1
Counter: 1520

Name: **Place/location identification**

Description of segment:

UN/EDIFACT			Implementation	
	Name	St Format	St Format	Use / Comments
LOC				
3227	Location function code qualifier	M an..3	M an..3	**5 = Place of departure** **8 = Place of destination** **13 = Place of transhipment** **28 = Country of destination of goods** **35 = Country of exportation/despatch** **55 = Charges and freight payable to**
C517	Location identification	C	R	
3225	Location name code	C an..35	D an..35	Use when available
1131	Code list identification code	C an..17	D an..17	**16 = Postcode directory** **37 = Railway locations** **140 = Area** **145 = Airport/city** **151 = Locations for tariff calculations** **162 = Country** Use when available
3055	Code list responsible agency code	C an..3	D an..3	Use when available. **3 = IATA (International Air Transport Association)** **9 = EAN International** **11 = Lloyd's register of shipping** **12 = UIC (International union of railways)** **87 = Assigned by carrier** **91 = Assigned by seller or seller's agent** **92 = Assigned by buyer or buyer's agent**
3224	Location name	C an..256	D an..70	Use if code not available
C519	Related location one identification	C	N	
3223	First related location name code	C an..25	N	not used
1131	Code list identification code	C an..17	N	not used
3055	Code list responsible agency code	C an..3	N	not used
3222	First related location name	C an..70	N	not used
C553	Related location two identification	C	N	
3233	Second related location name code	C an..25	N	not used
1131	Code list identification code	C an..17	N	not used
3055	Code list responsible agency code	C an..3	N	not used
3232	Second related location name	C an..70	N	not used
5479	Relation code	C an..3	N	not used

Comment:

Example:
LOC+5+VAXJO'

UN/EDIFACT Message: Segment details

Group: **SG34** Status: O Max. Occ.: 5 VAT or other tax rate and amount for line item

This segment group is required when VAT is calculated at the line item level. Tax identification is required at the line item level as different goods and services can be taxed at different rates. If only one tax rate applies to all line items, this segment group can be omitted.

Segment: **TAX** Seq. No.: 63 Level: 2 **Duty/tax/fee details**
Status: M Max. Occ.: 1
Counter: 1560

Name: **VAT or other tax rate line item**

Description of segment:

UN/EDIFACT			Implementation	
	Name	St Format	St Format	Use / Comments
TAX				
5283	Duty or tax or fee function code qualifier	M an..3	M an..3	**7 = Tax**
C241	Duty/tax/fee type	C	R	
5153	Duty or tax or fee type name code	C an..3	R an..3	Code OTH shall be used when the tax in question is not VAT. **AAG = Harmonised sales tax, Canadian** **AAH = Quebec sales tax** **AAI = Canadian provincial sales tax** **BOL = Stamp duty (Imposta di Bollo)** **GST = Goods and services tax** **LOC = Local sales tax** **OTH = Other taxes** **STT = State/provincial sales tax** **VAT = Value added tax**
1131	Code list identification code	C an..17	N	not used
3055	Code list responsible agency code	C an..3	N	not used
5152	Duty or tax or fee type name	C an..35	N	not used
C533	Duty/tax/fee account detail	C	N	
5289	Duty or tax or fee account code	M an..6	N	not used
1131	Code list identification code	C an..17	N	not used
3055	Code list responsible agency code	C an..3	N	not used
5286	Duty or tax or fee assessment basis quantity	C an..15	N	not used
C243	Duty/tax/fee detail	C	R	
5279	Duty or tax or fee rate code	C an..7	N	not used
1131	Code list identification code	C an..17	N	not used
3055	Code list responsible agency code	C an..3	N	not used
5278	Duty or tax or fee rate	C an..17	R n..7	The tax rate (numeric) should be presented as follows: 19.5% ==> :19.5
5273	Duty or tax or fee rate basis code	C an..12	N	not used
1131	Code list identification code	C an..17	N	not used
3055	Code list responsible agency code	C an..3	N	not used
5305	Duty or tax or fee category code	C an..3	R an..3	Recommendation: **AAA = Exempt - Article 15 of Directive 77/388/EC** **AAB = Exempt - Article 16 of Directive 77/388/EC** **AAE = Exempt - Article 28b(C)**

UN/EDIFACT Message: Segment details

UN/EDIFACT			Implementation	
	Name	St Format	St Format	Use / Comments
				AAL = Reverse Charge - 2nd subparagraph of Article 16(1) of Directive 77/388/EC **E = Exempt from tax** **S = Standard rate** **Z = Zero rated goods**
3446	Party tax identifier	C an..20	N	not used
1227	Calculation sequence code	C an..3	N	not used

Comment:
When sending a message with data element 5278 in the TAX segment, the value added tax rate (numeric) should be presented in an alpha-numeric field as follows: 19,5% ==> :19.5

Example:
TAX+7+VAT+++:::16+S'

UN/EDIFACT Message: Segment details

Group: **SG34** Status: O Max. Occ.: 5 VAT or other tax rate and amount for line item

This segment group is required when VAT is calculated at the line item level. Tax identification is required at the line item level as different goods and services can be taxed at different rates. If only one tax rate applies to all line items, this segment group can be omitted.

Segment: **MOA** Seq. No.: 64 Level: 3 **Monetary amount**
Status: O Max. Occ.: 2
Counter: 1570

Name: **VAT or other tax amount line item**

Description of segment:

UN/EDIFACT			Implementation	
	Name	St Format	St Format	Use / Comments
MOA				
C516	Monetary amount	M	M	
5025	Monetary amount type code qualifier	M an..3	M an..3	**124 = Tax amount** **125 = Taxable amount**
5004	Monetary amount	C n..35	R n..18	Tax Amount
6345	Currency identification code	C an..3	O an..3	
6343	Currency type code qualifier	C an..3	O an..3	**4 = Invoicing currency** **11 = Payment currency** Note that 4 =Invoicing currency and 11 = payment currency are to be understood as synonymous
4405	Status description code	C an..3	N	not used

Comment:

Example:
```
MOA+124:160:SEK:11'
```

UN/EDIFACT Message: Segment details

Group: **SG35** Status: O Max. Occ.: 1 Ship-to party

Segment: **NAD** Seq. No.: 65 Level: 2 **Name and address**
Status: M Max. Occ.: 1
Counter: 1600

Name: **Ship-to**

Description of segment:

UN/EDIFACT			Implementation	
	Name	St Format	St Format	Use / Comments
NAD				
3035	Party function code qualifier	M an..3	M an..3	**ST = Ship to** CN Consignee synonym to ST
C082	Party identification details	C	O	In most cases it will be sufficient to use C082 for identification of ship-to party. If not, either C058 (unstructured address) or C080 and following data elements should be used (structured address). The preferred version is the structured address.
3039	Party identifier	M an..35	M an..35	
1131	Code list identification code	C an..17	N	not used
3055	Code list responsible agency code	C an..3	R an..3	**9 = EAN International** **10 = ODETTE** **16 = US, D&B (Dun & Bradstreet Corporation)** **87 = Assigned by carrier** **91 = Assigned by seller or seller's agent** **92 = Assigned by buyer or buyer's agent**
C058	Name and address	C	N	
3124	Name and address description	M an..35	N	not used
3124	Name and address description	C an..35	N	not used
3124	Name and address description	C an..35	N	not used
3124	Name and address description	C an..35	N	not used
3124	Name and address description	C an..35	N	not used
C080	Party name	C	D	
3036	Party name	M an..35	M an..35	
3036	Party name	C an..35	O an..35	see 3036 # 1
3036	Party name	C an..35	C an..35	
3036	Party name	C an..35	C an..35	
3036	Party name	C an..35	C an..35	
3045	Party name format code	C an..3	C an..3	
C059	Street	C	D	For usage see comment on C082.
3042	Street and number or post office box identifier	M an..35	M an..35	
3042	Street and number or post office box identifier	C an..35	O an..35	see 3042 # 1
3042	Street and number or post office box identifier	C an..35	N	not used
3042	Street and number or post office box identifier	C an..35	N	not used
3164	City name	C an..35	R an..35	
C819	Country sub-entity details	C	N	
3229	Country sub-entity name code	C an..9	N	not used
1131	Code list identification code	C an..17	N	not used

UN/EDIFACT Message: Segment details

UN/EDIFACT			Implementation	
	Name	St Format	St Format	Use / Comments
3055	Code list responsible agency code	C an..3	N	not used
3228	Country sub-entity name	C an..70	N	not used
3251	Postal identification code	C an..17	R an..17	The Swedish post code is exchanged in unedited form(i.e it is to contain no spaces)
3207	Country name code	C an..3	D a2	Use if qualifier is other = 'SE' The Swedish post code is exchanged in unedited form(i.e it is to contain no spaces)

Comment:
CN is a synonym to ST

Example:
```
NAD+ST+12::9+SHIP-TO NAME+INDUSTRY PARK+NEWCASTLE++ABC 134+UK'
```

UN/EDIFACT Message: Segment details

Group: **SG35** Status: O Max. Occ.: 1 Ship-from party

Segment: **NAD** Seq. No.: 66 Level: 2 **Name and address**
Status: M Max. Occ.: 1
Counter: 1600

Name: **Ship-from**

Description of segment:

UN/EDIFACT			Implementation	
	Name	St Format	St Format	Use / Comments
NAD				
3035	Party function code qualifier	M an..3	M an..3	**SF = Ship from**
C082	Party identification details	C	C	
3039	Party identifier	M an..35	M an..35	
1131	Code list identification code	C an..17	N	not used
3055	Code list responsible agency code	C an..3	R an..3	**9 = EAN International** **87 = Assigned by carrier** **92 = Assigned by buyer or buyer's agent** **10 = ODETTE** **16 = US, D&B (Dun & Bradstreet Corporation)**
C058	Name and address	C	N	
3124	Name and address description	M an..35	N	not used
3124	Name and address description	C an..35	N	not used
3124	Name and address description	C an..35	N	not used
3124	Name and address description	C an..35	N	not used
3124	Name and address description	C an..35	N	not used
C080	Party name	C	R	
3036	Party name	M an..35	M an..35	
3036	Party name	C an..35	O an..35	
3036	Party name	C an..35	N	not used
3036	Party name	C an..35	N	not used
3036	Party name	C an..35	N	not used
3045	Party name format code	C an..3	N	not used
C059	Street	C	D	If available
3042	Street and number or post office box identifier	M an..35	M an..35	
3042	Street and number or post office box identifier	C an..35	O an..35	
3042	Street and number or post office box identifier	C an..35	N	not used
3042	Street and number or post office box identifier	C an..35	N	not used
3164	City name	C an..35	R an..35	
C819	Country sub-entity details	C	N	
3229	Country sub-entity name code	C an..9	N	not used
1131	Code list identification code	C an..17	N	not used
3055	Code list responsible agency code	C an..3	N	not used
3228	Country sub-entity name	C an..70	N	not used
				The Swedish post code is exchanged in unedited form(i.e it is

UN/EDIFACT Message: Segment details

UN/EDIFACT			Implementation	
	Name	St Format	St Format	Use / Comments
3251	Postal identification code	C an..17	R an..17	to contain no spaces)
3207	Country name code	C an..3	D an..3	Use this qualifier if other than = 'SE'

Comment:
CZ is a synonym to SF

Example:
```
NAD+SF+1234567::92++COMPANY GMBH+SMALLROAD+SMALLTOWN++DE5409+DE '
```

UN/EDIFACT Message: Segment details

Group: **SG35** Status: D Max. Occ.: 1 Carrier party

Segment: **NAD** Seq. No.: 67 Level: 2 **Name and address**
Status: M Max. Occ.: 1
Counter: 1600

Name: **Carrier**

Description of segment:

UN/EDIFACT			Implementation	
	Name	St Format	St Format	Use / Comments
NAD				
3035	Party function code qualifier	M an..3	M an..3	**CA = Carrier**
C082	Party identification details	C	O	
3039	Party identifier	M an..35	M an..35	
1131	Code list identification code	C an..17	N	not used
3055	Code list responsible agency code	C an..3	R an..3	**87 = Assigned by carrier** **92 = Assigned by buyer or buyer's agent** **9 = EAN International** **16 = US, D&B (Dun & Bradstreet Corporation)** **10 = ODETTE**
C058	Name and address	C	N	
3124	Name and address description	M an..35	N	not used
3124	Name and address description	C an..35	N	not used
3124	Name and address description	C an..35	N	not used
3124	Name and address description	C an..35	N	not used
3124	Name and address description	C an..35	N	not used
C080	Party name	C	R	
3036	Party name	M an..35	M an..35	
3036	Party name	C an..35	O an..35	see 3036 # 1
3036	Party name	C an..35	N	not used
3036	Party name	C an..35	N	not used
3036	Party name	C an..35	N	not used
3045	Party name format code	C an..3	N	not used
C059	Street	C	D	If available
3042	Street and number or post office box identifier	M an..35	M an..35	
3042	Street and number or post office box identifier	C an..35	O an..35	see 3042 # 1
3042	Street and number or post office box identifier	C an..35	N	not used
3042	Street and number or post office box identifier	C an..35	N	not used
3164	City name	C an..35	R an..35	
C819	Country sub-entity details	C	N	
3229	Country sub-entity name code	C an..9	N	not used
1131	Code list identification code	C an..17	N	not used
3055	Code list responsible agency code	C an..3	N	not used
3228	Country sub-entity name	C an..70	N	not used
				The Swedish post code is exchanged in unedited form(i.e it is

UN/EDIFACT Message: Segment details

UN/EDIFACT			Implementation	
	Name	St Format	St Format	Use / Comments
3251	Postal identification code	C an..17	R an..17	to contain no spaces)
3207	Country name code	C an..3	D an..3	Use this element if qualifier is other than = 'SE'

Comment:

Example:
```
NAD+CA+SCH::87++COMPANY GMBH+SMALLROAD+SMALLTOWN++DE5409+DE '
```

UN/EDIFACT Message: Segment details

Group: **SG35** Status: D Max. Occ.: 1 Agent party

Segment: **NAD** Seq. No.: 68 Level: 2 **Name and address**
Status: M Max. Occ.: 1
Counter: 1600

Name: **Agent**

Description of segment:

UN/EDIFACT			Implementation	
	Name	St Format	St Format	Use / Comments
NAD				
3035	Party function code qualifier	M an..3	M an..3	**AG = Agent/representative** Party authorised to act on behalf of another party
C082	Party identification details	C	R	
3039	Party identifier	M an..35	R an..35	
1131	Code list identification code	C an..17	N	not used
3055	Code list responsible agency code	C an..3	R an..3	**9 = EAN International** **87 = Assigned by carrier** **92 = Assigned by buyer or buyer's agent** **10 = ODETTE** **16 = US, D&B (Dun & Bradstreet Corporation)**
C058	Name and address	C	N	
3124	Name and address description	M an..35	N	not used
3124	Name and address description	C an..35	N	not used
3124	Name and address description	C an..35	N	not used
3124	Name and address description	C an..35	N	not used
3124	Name and address description	C an..35	N	not used
C080	Party name	C	R	
3036	Party name	M an..35	M an..35	
3036	Party name	C an..35	O an..35	
3036	Party name	C an..35	N	not used
3036	Party name	C an..35	N	not used
3036	Party name	C an..35	N	not used
3045	Party name format code	C an..3	N	not used
C059	Street	C	R	
3042	Street and number or post office box identifier	M an..35	M an..35	
3042	Street and number or post office box identifier	C an..35	O an..35	
3042	Street and number or post office box identifier	C an..35	N	not used
3042	Street and number or post office box identifier	C an..35	N	not used
3164	City name	C an..35	R an..35	
C819	Country sub-entity details	C	N	
3229	Country sub-entity name code	C an..9	N	not used
1131	Code list identification code	C an..17	N	not used
3055	Code list responsible agency code	C an..3	N	not used
3228	Country sub-entity name	C an..70	N	not used

UN/EDIFACT Message: Segment details

UN/EDIFACT			Implementation	
	Name	St Format	St Format	Use / Comments
3251	Postal identification code	C an..17	R an..17	The Swedish post code is exchanged in unedited form(i.e it is to contain no spaces)
3207	Country name code	C an..3	D an..3	Use this element if qualifier is other than = 'SE'

Comment:

Example:
```
NAD+AG+SCH::87++COMPANY GMBH+SMALLROAD+SMALLTOWN++DE5409+DE '
```

UN/EDIFACT Message: Segment details

Group: **SG35** Status: D Max. Occ.: 1 Brokers or Sales Office party

Segment: **NAD** Seq. No.: 69 Level: 2 **Name and address**
Status: M Max. Occ.: 1
Counter: 1600

Name: **Brokers or Sales Office party**

Description of segment:

UN/EDIFACT			Implementation	
	Name	St Format	St Format	Use / Comments
NAD				
3035	Party function code qualifier	M an..3	M an..3	**BO = Broker or sales office** Party acting in the name of the Seller or as a broker or as sales office.
C082	Party identification details	C	C	
3039	Party identifier	M an..35	R an..35	
1131	Code list identification code	C an..17	N	not used
3055	Code list responsible agency code	C an..3	R an..3	**9 = EAN International** **16 = US, D&B (Dun & Bradstreet Corporation)** **10 = ODETTE** **87 = Assigned by carrier** **92 = Assigned by buyer or buyer's agent**
C058	Name and address	C	N	
3124	Name and address description	M an..35	N	not used
3124	Name and address description	C an..35	N	not used
3124	Name and address description	C an..35	N	not used
3124	Name and address description	C an..35	N	not used
3124	Name and address description	C an..35	N	not used
C080	Party name	C	R	
3036	Party name	M an..35	M an..35	
3036	Party name	C an..35	O an..35	
3036	Party name	C an..35	N	not used
3036	Party name	C an..35	N	not used
3036	Party name	C an..35	N	not used
3045	Party name format code	C an..3	N	not used
C059	Street	C	D	If available
3042	Street and number or post office box identifier	M an..35	M an..35	
3042	Street and number or post office box identifier	C an..35	O an..35	see 3042 # 1
3042	Street and number or post office box identifier	C an..35	N	not used
3042	Street and number or post office box identifier	C an..35	N	not used
3164	City name	C an..35	R an..35	
C819	Country sub-entity details	C	N	
3229	Country sub-entity name code	C an..9	N	not used
1131	Code list identification code	C an..17	N	not used
3055	Code list responsible agency code	C an..3	N	not used

UN/EDIFACT Message: Segment details

UN/EDIFACT			Implementation	
	Name	St Format	St Format	Use / Comments
3228	Country sub-entity name	C an..70	N	not used
3251	Postal identification code	C an..17	R an..17	The Swedish post code is exchanged in unedited form(i.e it is to contain no spaces)
3207	Country name code	C an..3	D an..3	Use this element if qualifier is other than = 'SE'

Comment:

Example:
```
NAD+BO+SCH::87++COMPANY GMBH+SMALLROAD+SMALLTOWN++DE5409+DE '
```

UN/EDIFACT Message: Segment details

Group: **SG35** Status: D Max. Occ.: 1 Delivery party

Segment: **NAD** Seq. No.: 70 Level: 2 **Name and address**
Status: M Max. Occ.: 1
Counter: 1600

Name: **Delivery**

Description of segment:

UN/EDIFACT			Implementation	
	Name	St Format	St Format	Use / Comments
NAD				
3035	Party function code qualifier	M an..3	M an..3	**DP = Delivery party** Use this Party if other than Ship To
C082	Party identification details	C	R	
3039	Party identifier	M an..35	R an..35	
1131	Code list identification code	C an..17	N	not used
3055	Code list responsible agency code	C an..3	R an..3	**9 = EAN International** **10 = ODETTE** **16 = US, D&B (Dun & Bradstreet Corporation)** **87 = Assigned by carrier** **92 = Assigned by buyer or buyer's agent**
C058	Name and address	C	N	
3124	Name and address description	M an..35	N	not used
3124	Name and address description	C an..35	N	not used
3124	Name and address description	C an..35	N	not used
3124	Name and address description	C an..35	N	not used
3124	Name and address description	C an..35	N	not used
C080	Party name	C	C	
3036	Party name	M an..35	M an..35	
3036	Party name	C an..35	O an..35	see 3036 # 1
3036	Party name	C an..35	N	not used
3036	Party name	C an..35	N	not used
3036	Party name	C an..35	N	not used
3045	Party name format code	C an..3	N	not used
C059	Street	C	C	
3042	Street and number or post office box identifier	M an..35	M an..35	
3042	Street and number or post office box identifier	C an..35	O an..35	see 3042 # 1
3042	Street and number or post office box identifier	C an..35	N	not used
3042	Street and number or post office box identifier	C an..35	N	not used
3164	City name	C an..35	C an..35	
C819	Country sub-entity details	C	N	
3229	Country sub-entity name code	C an..9	N	not used
1131	Code list identification code	C an..17	N	not used
3055	Code list responsible agency code	C an..3	N	not used
3228	Country sub-entity name	C an..70	N	not used

UN/EDIFACT Message: Segment details

UN/EDIFACT			Implementation	
	Name	St Format	St Format	Use / Comments
3251	Postal identification code	C an..17	R an..17	The Swedish post code is exchanged in unedited form(i.e it is to contain no spaces)
3207	Country name code	C an..3	D an..3	Use this element if qualifier is other than = 'SE'

Comment:

Example:
```
NAD+DP+SCH::87++COMPANY GMBH+SMALLROAD+SMALLTOWN++DE5409+DE '
```

UN/EDIFACT Message: Segment details

Group: **SG39** Status: D Max. Occ.: 10 Allowances or charges

Segment: **ALC** Seq. No.: 71 Level: 2 **Allowance or charge**
Status: M Max. Occ.: 1
Counter: 1730

Name: **Allowance/charge**

Description of segment:

UN/EDIFACT			Implementation	
	Name	St Format	St Format	Use / Comments
ALC				
5463	Allowance or charge code qualifier	M an..3	R an..3	Allowance/Charge Qualifier **A = Allowance** **C = Charge**
C552	Allowance/charge information	C	N	
1230	Allowance or charge identifier	C an..35	N	not used
5189	Allowance or charge identification code	C an..3	N	not used
4471	Settlement means code	C an..3	C an..3	**2 = Off invoice** **6 = Charge to be paid by customer**
1227	Calculation sequence code	C an..3	D an..3	**1 = First step of calculation** **2 = Second step of calculation** **3 = Third step of calculation** **4 = Fourth step of calculation**
C214	Special services identification	C	R	
7161	Special service description code	C an..3	R an..3	Use Carrier's Allowance and charge list. http://www.swedfreight.se/Documents/eCom/Kodlistor/fraktkostnadskoder.pdf
1131	Code list identification code	C an..17	N	not used
3055	Code list responsible agency code	C an..3	R an..3	**6 = UN/ECE (United Nations - Economic Commission for Europe)** **10 = ODETTE** **87 = Assigned by carrier** **91 = Assigned by seller or seller's agent**
7160	Special service description	C an..35	D an..35	Use this element to describe miscelleneous
7160	Special service description	C an..35	C an..35	

Comment:

Example:
```
ALC+A++2+1+ABG::87:text'
```

UN/EDIFACT Message: Segment details

Group: **SG42** Status: R Max. Occ.: 2 Allowance/charge - monetary amount

Segment: **MOA** Seq. No.: 72 Level: 3 **Monetary amount**
Status: M Max. Occ.: 1
Counter: 1840

Name: **Allowance/charge - monetary amount**

Description of segment:

UN/EDIFACT			Implementation	
	Name	St Format	St Format	Use / Comments
MOA				
C516	Monetary amount	M	M	
5025	Monetary amount type code qualifier	M an..3	M an..3	**8 = Allowance or charge amount** **6 = Amount reference currency**
5004	Monetary amount	C n..35	R n..15	Informative only, no calculation. This amount is already to be included MOA+203
6345	Currency identification code	C an..3	O an..3	For currency, one may also refer to CUX segment (invoice currency) May be an other currency than those shown in CUX.
6343	Currency type code qualifier	C an..3	O an..3	**4 = Invoicing currency** **11 = Payment currency** Note that 4 =Invoicing currency and 11 = payment currency are to be understood as synonymous
4405	Status description code	C an..3	N	not used

Comment:

Example:
```
MOA+8:100:SEK:11'
```

UN/EDIFACT Message: Segment details

Group: **SG44** Status: O Max. Occ.: 2 Allowance/charge - applicable VAT rate and amount

Segment: **TAX** Seq. No.: 73 Level: 3 **Duty/tax/fee details**
Status: M Max. Occ.: 1
Counter: 1920

Name: **Allowance/charge - applicable VAT rate**

Description of segment:

UN/EDIFACT			Implementation	
	Name	St Format	St Format	Use / Comments
TAX				
5283	Duty or tax or fee function code qualifier	M an..3	R an..3	**7 = Tax**
C241	Duty/tax/fee type	C	O	
5153	Duty or tax or fee type name code	C an..3	R an..3	Code OTH shall be used when the tax in question is not VAT. **AAG = Harmonised sales tax, Canadian** **AAH = Quebec sales tax** **AAI = Canadian provincial sales tax** **BOL = Stamp duty (Imposta di Bollo)** **GST = Goods and services tax** **LOC = Local sales tax** **OTH = Other taxes** **STT = State/provincial sales tax** **VAT = Value added tax**
1131	Code list identification code	C an..17	N	not used
3055	Code list responsible agency code	C an..3	N	not used
5152	Duty or tax or fee type name	C an..35	N	not used
C533	Duty/tax/fee account detail	C	N	
5289	Duty or tax or fee account code	M an..6	N	not used
1131	Code list identification code	C an..17	N	not used
3055	Code list responsible agency code	C an..3	N	not used
5286	Duty or tax or fee assessment basis quantity	C an..15	N	not used
C243	Duty/tax/fee detail	C	R	
5279	Duty or tax or fee rate code	C an..7	N	not used
1131	Code list identification code	C an..17	N	not used
3055	Code list responsible agency code	C an..3	N	not used
5278	Duty or tax or fee rate	C an..17	R n..7	
5273	Duty or tax or fee rate basis code	C an..12	N	not used
1131	Code list identification code	C an..17	N	not used
3055	Code list responsible agency code	C an..3	N	not used
5305	Duty or tax or fee category code	C an..3	O an..3	Recommendation: **AAA = Exempt - Article 15 of Directive 77/388/EC** **AAB = Exempt - Article 16 of Directive 77/388/EC** **AAE = Exempt - Article 28b(C)** **AAL = Reverse Charge - 2nd subparagraph of Article 16(1) of Directive 77/388/EC** **S = Standard rate** **E = Exempt from tax**

UN/EDIFACT Message: Segment details

UN/EDIFACT			Implementation	
	Name	St Format	St Format	Use / Comments
				Z = Zero rated goods
3446	Party tax identifier	C an..20	N	not used
1227	Calculation sequence code	C an..3	N	not used

Comment:

Example:
TAX+7+VAT+++:::16+S'

UN/EDIFACT Message: Segment details

Group: **SG44** Status: O Max. Occ.: 2 Allowance/charge - applicable VAT rate and amount

Segment: **MOA** Seq. No.: 74 Level: 4 **Monetary amount**
Status: O Max. Occ.: 1
Counter: 1930

Name: **Allowance/charge - applicable VAT amount**

Description of segment:

UN/EDIFACT			Implementation	
	Name	St Format	St Format	Use / Comments
MOA				
C516	Monetary amount	M	M	
5025	Monetary amount type code qualifier	M an..3	M an..3	**124 = Tax amount** **125 = Taxable amount**
5004	Monetary amount	C n..35	R n..18	
6345	Currency identification code	C an..3	O an..3	For currency, one may also refer to CUX segment (invoice currency) May be an other currency than those shown in CUX.
6343	Currency type code qualifier	C an..3	O an..3	**4 = Invoicing currency** **11 = Payment currency** Note that 4 =Invoicing currency and 11 = payment currency are to be understood as synonymous
4405	Status description code	C an..3	N	not used

Comment:

Example:
```
MOA+124:16'
```

UN/EDIFACT Message: Segment details

Group: **SG45** Status: R Max. Occ.: 10 Transport details

Segment: **TDT** Seq. No.: 75 Level: 2 **Transport information**
Status: M Max. Occ.: 1
Counter: 1950

Name: **Transport information**

Description of segment:

UN/EDIFACT			Implementation	
	Name	St Format	St Format	Use / Comments
TDT				
8051	Transport stage code qualifier	M an..3	M an..3	**12 = At departure** **25 = Delivery carrier all transport** **10 = Pre-carriage transport** **20 = Main-carriage transport** **30 = On-carriage transport**
8028	Means of transport journey identifier	C an..17	O an..17	**Conveyance Reference Number** Unique reference given by the carrier to a certain journey or departure of a means of transport (generic term).
C220	Mode of transport	C	O	
8067	Transport mode name code	C an..3	R an..3	**10 = Maritime transport** **12 = A railway wagon on a vessel at sea** **20 = Rail transport** **23 = Trailers or road vehicles being transported by rail** **30 = Road transport** **40 = Air transport** **50 = Mail** **60 = Multimodal transport** **70 = Fixed transport installations** **80 = Inland water transport** **90 = Mode unknown** 11 = Ferry transport
8066	Transport mode name	C an..17	N	not used
C001	Transport means	C	N	
8179	Transport means description code	C an..8	N	not used
1131	Code list identification code	C an..17	N	not used
3055	Code list responsible agency code	C an..3	N	not used
8178	Transport means description	C an..17	N	not used
C040	Carrier	C	O	
3127	Carrier identifier	C an..17	D an..17	Identification of party undertaking or arranging transport of goods between named points. May be used to convey a routing code at line item level.
1131	Code list identification code	C an..17	N	not used
3055	Code list responsible agency code	C an..3	D an..3	**92 = Assigned by buyer or buyer's agent**
3128	Carrier name	C an..35	O an..35	
8101	Transit direction indicator code	C an..3	N	not used
C401	Excess transportation information	C	N	
8457	Excess transportation reason code	M an..3	N	not used
8459	Excess transportation	M an..3	N	not used

UN/EDIFACT Message: Segment details

UN/EDIFACT			Implementation	
	Name	St Format	St Format	Use / Comments
	responsibility code			
7130	Customer shipment authorisation identifier	C an..17	N	not used
C222	Transport identification	C	O	
8213	Transport means identification name identifier	C an..9	N	not used
1131	Code list identification code	C an..17	N	not used
3055	Code list responsible agency code	C an..3	N	not used
8212	Transport means identification name	C an..35	D an..17	Vehicle Licence Plate/Aircraft number
8453	Transport means nationality code	C an..3	D an..3	ISO 3166 two alpha code.
8281	Transport means ownership indicator code	C an..3	N	not used

Comment:
To specify the transport details such as mode of transport, means of transport, its conveyance reference number and the identification of the means of transport.

Example:
```
TDT+25++30++12345::92:Name AB+++:::ABC 125:SE'
```

UN/EDIFACT Message: Segment details

Segment: **UNS**

Seq. No.: 76 Level: 0 **Section control**
Status: M Max. Occ.: 1
Counter: 2180

Name: **Section control**

Description of segment:

UN/EDIFACT			Implementation	
	Name	St Format	St Format	Use / Comments
UNS				
0081	Section identification	M a1	M a1	**S = Detail/summary section separation**

Comment:

Example:
UNS+S'

UN/EDIFACT Message: Segment details

Segment: **CNT** Seq. No.: 77 Level: 1 **Control total**
Status: O Max. Occ.: 3
Counter: 2190

Name: **Control total**

Description of segment:

UN/EDIFACT			Implementation	
	Name	St Format	St Format	Use / Comments
CNT				
C270	Control	M	M	
6069	Control total type code qualifier	M an..3	M an..3	It is recommended, to use at least CNT with code 2 (number of line items) in each detailed invoice message. **1 = Total of line item quantities** **2 = Number of line items in message**
6066	Control total quantity	M n..18	R n..10	Quantity / Control value
6411	Measurement unit code	C an..8	N	not used

Comment:

Example:
```
CNT+2:1'
```

UN/EDIFACT Message: Segment details

Group: **SG50** Status: R Max. Occ.: 1 Invoice amount in Invoicing or payment currency

Note that 4 =Invoicing currency and 11 = payment currency are to be understood as synonymous)

Segment: **MOA** Seq. No.: 78 Level: 1 **Monetary amount**
Status: M Max. Occ.: 1
Counter: 2210

Name: **Invoice amount in Invoicing or Payment currency**

Description of segment:

UN/EDIFACT			Implementation	
	Name	St Format	St Format	Use / Comments
MOA				
C516	Monetary amount	M	M	
5025	Monetary amount type code qualifier	M an..3	M an..3	Amount Type **77 = Invoice amount** Although the EDIFACT codelist provides another code for the sum of several invoice documents (e.g. in a summarised message like an invoice trailer) for the sake of keeping the message as simple as possible the code 77 shall be used also in those messages.
5004	Monetary amount	C n..35	R n..15	
6345	Currency identification code	C an..3	O an..3	Invoicing or Payment currency, coded according to ISO 4217 three alpha code.
6343	Currency type code qualifier	C an..3	O an..3	Amount Currency Qualifier **4 = Invoicing currency** **11 = Payment currency** Note that 4 =Invoicing currency and 11 = payment currency are to be understood as synonymous)
4405	Status description code	C an..3	N	not used

Comment:
Total sum charged in respect of a single invoice in accordance with the terms of delivery.
When amounts have to be specified by legal reasons also in home currency, this segment has to be sent.
If the amount is stated in the invoicing currency, the currency type qualifier is optional. For (additional) home and payment currency it has to be stated.
Note that 4 =Invoicing currency and 11 = payment currency are to be understood as synonymous)

Example:
```
MOA+77:824.76::4'
```

UN/EDIFACT Message: Segment details

Group: **SG50** Status: D Max. Occ.: 1 Total invoice additional amount in Invoicing or Payment currency

Segment: **MOA** Seq. No.: 79 Level: 1 **Monetary amount**
Status: M Max. Occ.: 1
Counter: 2210

Name: **Total invoice additional amount in Invoicing or Payment currency**

Description of segment:

UN/EDIFACT			Implementation	
	Name	St Format	St Format	Use / Comments
MOA				
C516	Monetary amount	M	M	
5025	Monetary amount type code qualifier	M an..3	M an..3	Amount Type **131 = Total charges/allowances**
5004	Monetary amount	C n..35	R n..15	
6345	Currency identification code	C an..3	O an..3	Invoicing or Payment currency, coded according to ISO 4217 three alpha code.
6343	Currency type code qualifier	C an..3	O an..3	Amount Currency Qualifier **4 = Invoicing currency** **11 = Payment currency** Note that 4 =Invoicing currency and 11 = payment currency are to be understood as synonymous)
4405	Status description code	C an..3	N	not used

Comment:
When amounts have to be specified by legal reasons also in home currency, this segment has to be sent.
If the amount is stated in the invoicing currency, the currency type qualifier is optional. For (additional) home and payment currency it has to be stated.

Example:
```
MOA+131:824.76::11'
```

UN/EDIFACT Message: Segment details

Group: **SG50** Status: D Max. Occ.: 1 Total taxable amount in invoicing or payment currency

Segment: **MOA** Seq. No.: 80 Level: 1 **Monetary amount**
Status: M Max. Occ.: 1
Counter: 2210

Name: **Total taxable amount in invoicing or payment currency**

Description of segment:

UN/EDIFACT			Implementation	
	Name	St Format	St Format	Use / Comments
MOA				
C516	Monetary amount	M	M	
5025	Monetary amount type code qualifier	M an..3	M an..3	Amount Type **125 = Taxable amount**
5004	Monetary amount	C n..35	R n..15	Amount
6345	Currency identification code	C an..3	O an..3	Invoicing or Payment currency, coded according to ISO 4217 three alpha code.
6343	Currency type code qualifier	C an..3	O an..3	Amount Currency Qualifier **4 = Invoicing currency** **11 = Payment currency** Note that 4 =Invoicing currency and 11 = payment currency are to be understood as synonymous)
4405	Status description code	C an..3	N	not used

Comment:
If no taxes or duties apply to any part of the invoice this occurence of SG50 can be omitted.
If an invoicing and a home currency are used, for transactions with European partners this SG50 shall be present by legal reasons even if only zero rate taxes apply to the invoiced items.
If the amount is stated in the invoicing currency, the currency type qualifier is optional. For (additional) home and payment currency it has to be stated.

Example:
```
MOA+125:711::11'
```

UN/EDIFACT Message: Segment details

Group: **SG50** Status: D Max. Occ.: 1 Total tax in invoicing or payment currency

Segment: **MOA** Seq. No.: 81 Level: 1 **Monetary amount**
Status: M Max. Occ.: 1
Counter: 2210

Name: **Total tax amount in invoicing or payment currency**

Description of segment:

UN/EDIFACT			Implementation	
	Name	St Format	St Format	Use / Comments
MOA				
C516	Monetary amount	M	M	
5025	Monetary amount type code qualifier	M an..3	M an..3	Amount Type **176 = Message total duty/tax/fee amount**
5004	Monetary amount	C n..35	R n..15	Amount
6345	Currency identification code	C an..3	R an..3	Invoicing or Payment currency, coded according to ISO 4217 three alpha code.
6343	Currency type code qualifier	C an..3	O an..3	Amount Currency Qualifier **4 = Invoicing currency** **11 = Payment currency** Note that 4 =Invoicing currency and 11 = payment currency are to be understood as synonymous)
4405	Status description code	C an..3	N	not used

Comment:
If no taxes or duties apply to any part of the invoice this occurence of SG50 can be omitted.
If an invoicing and a home currency are used, for transactions with European partners this SG50 shall be present by legal reasons even if the total tax amount equals zero.
If the amount is stated in the invoicing currency, the currency type qualifier is optional. For (additional) home and payment currency it has to be stated.

Example:
```
MOA+176:113.76:SEK:3'
```

UN/EDIFACT Message: Segment details

Group: **SG50** Status: O Max. Occ.: 1 Total line items amount in invoicing or payment currency

Segment: **MOA** Seq. No.: 82 Level: 1 **Monetary amount**
Status: M Max. Occ.: 1
Counter: 2210

Name: **Total line items amount in invoicing or payment currency**

Description of segment:

UN/EDIFACT			Implementation	
	Name	St Format	St Format	Use / Comments
MOA				
C516	Monetary amount	M	M	
5025	Monetary amount type code qualifier	M an..3	M an..3	Amount Type **79 = Total line items amount**
5004	Monetary amount	C n..35	R n..15	Amount
6345	Currency identification code	C an..3	R an..3	Invoicing or Payment currency, coded according to ISO 4217 three alpha code.
6343	Currency type code qualifier	C an..3	O an..3	Amount Currency Qualifier **4 = Invoicing currency** **11 = Payment currency** Note that 4 =Invoicing currency and 11 = payment currency are to be understood as synonymous)
4405	Status description code	C an..3	N	not used

Comment:
Total sum of all line items amounts.

Example:
```
MOA+79:1000::11'
```

UN/EDIFACT Message: Segment details

Group: **SG50** Status: O Max. Occ.: 1 Total invoice price adjustment amount in invoicing or payment currency

Segment: **MOA** Seq. No.: 83 Level: 1 **Monetary amount**
Status: M Max. Occ.: 1
Counter: 2210

Name: **Total invoice price adjustment amount in invoicing or payment currency**

Description of segment:

UN/EDIFACT			Implementation	
	Name	St Format	St Format	Use / Comments
MOA				
C516	Monetary amount	M	M	
5025	Monetary amount type code qualifier	M an..3	M an..3	Amount Type **165 = Adjustment amount**
5004	Monetary amount	C n..35	R n..15	Minus sign or DE 4405 must be used to indicate negative figures.
6345	Currency identification code	C an..3	R an..3	Invoicing or Payment currency, coded according to ISO 4217 three alpha code.
6343	Currency type code qualifier	C an..3	O an..3	Amount Currency Qualifier **4 = Invoicing currency** **11 = Payment currency** Note that 4 =Invoicing currency and 11 = payment currency are to be understood as synonymous)
4405	Status description code	C an..3	N	not used

Comment:
In some countries the invoice amount is always rounded to full currency units (e.g. SEK in Sweden). The sum of all line item amouts + or - allowances, charges, taxes does often not equals to this rounded invoice amount. In this case, an adjustment amount might be necessary to explain the difference.

Example:
```
MOA+165:0.26::11'
```

UN/EDIFACT Message: Segment details

Group: **SG50** Status: O Max. Occ.: 1 Exemption amount

Segment: **MOA** Seq. No.: 84 Level: 1 **Monetary amount**
Status: M Max. Occ.: 1
Counter: 2210

Name: **Non-taxable or exemption amount**

Description of segment:

UN/EDIFACT			Implementation	
	Name	St Format	St Format	Use / Comments
MOA				
C516	Monetary amount	M	M	
5025	Monetary amount type code qualifier	M an..3	M an..3	**403 = Exemption amount**
5004	Monetary amount	C n..35	R n..15	
6345	Currency identification code	C an..3	R an..3	Invoicing or Payment currency, coded according to ISO 4217 three alpha code.
6343	Currency type code qualifier	C an..3	O an..3	**4 = Invoicing currency** **11 = Payment currency** Note that 4 =Invoicing currency and 11 = payment currency are to be understood as synonymous)
4405	Status description code	C an..3	N	not used

Comment:

Example:
```
MOA+403:1000:EUR:11'
```

UN/EDIFACT Message: Segment details

Group: **SG50** Status: O Max. Occ.: 1 Non-taxable

Segment: **MOA** Seq. No.: 85 Level: 1 **Monetary amount**
Status: M Max. Occ.: 1
Counter: 2210

Name: **Non-taxable or exemption amount**

Description of segment:

UN/EDIFACT			Implementation	
	Name	St Format	St Format	Use / Comments
MOA				
C516	Monetary amount	M	M	
5025	Monetary amount type code qualifier	M an..3	M an..3	**342 = Non-taxable amount**
5004	Monetary amount	C n..35	R n..15	
6345	Currency identification code	C an..3	R an..3	Invoicing or Payment currency, coded according to ISO 4217 three alpha code.
6343	Currency type code qualifier	C an..3	O an..3	**4 = Invoicing currency** **11 = Payment currency** Note that 4 =Invoicing currency and 11 = payment currency are to be understood as synonymous)
4405	Status description code	C an..3	N	not used

Comment:

Example:
```
MOA+403:1000:SEK:11'
```

UN/EDIFACT Message: Segment details

Group: **SG52** Status: R Max. Occ.: 4 Tax rates and amounts

Segment: **TAX** Seq. No.: 86 Level: 1 **Duty/tax/fee details**
Status: M Max. Occ.: 1
Counter: 2260

Name: **Tax type**

Description of segment:

UN/EDIFACT			Implementation	
	Name	St Format	St Format	Use / Comments
TAX				
5283	Duty or tax or fee function code qualifier	M an..3	M an..3	**7 = Tax** **9 = Tax related information**
C241	Duty/tax/fee type	C	R	
5153	Duty or tax or fee type name code	C an..3	R an..3	Duty/Tax/Fee Type Coded Code OTH shall be used when the tax in question is not VAT. **AAG = Harmonised sales tax, Canadian** **AAH = Quebec sales tax** **AAI = Canadian provincial sales tax** **BOL = Stamp duty (Imposta di Bollo)** **GST = Goods and services tax** **LOC = Local sales tax** **OTH = Other taxes** **STT = State/provincial sales tax** **VAT = Value added tax**
1131	Code list identification code	C an..17	N	not used
3055	Code list responsible agency code	C an..3	N	not used
5152	Duty or tax or fee type name	C an..35	N	not used
C533	Duty/tax/fee account detail	C	N	
5289	Duty or tax or fee account code	M an..6	N	not used
1131	Code list identification code	C an..17	N	not used
3055	Code list responsible agency code	C an..3	N	not used
5286	Duty or tax or fee assessment basis quantity	C an..15	N	not used
C243	Duty/tax/fee detail	C	R	
5279	Duty or tax or fee rate code	C an..7	N	not used
1131	Code list identification code	C an..17	N	not used
3055	Code list responsible agency code	C an..3	N	not used
5278	Duty or tax or fee rate	C an..17	R n..7	Duty/Tax/Fee Rate
5273	Duty or tax or fee rate basis code	C an..12	N	not used
1131	Code list identification code	C an..17	N	not used
3055	Code list responsible agency code	C an..3	N	not used
5305	Duty or tax or fee category code	C an..3	D an..3	The use of any valid EDIFACT code is permitted, the trading partners may limit the codes in accordance with business and legal requirements. (1) Codes created to comply with the European invoicing directive. These codes are not yet part of the official EDIFACT code list. In Europe it is recommended or even required to use these more specific codes instead of code E. **AAA = Exempt - Article 15 of Directive 77/388/EC**

UN/EDIFACT Message: Segment details

UN/EDIFACT			Implementation	
	Name	St Format	St Format	Use / Comments
				AAB = Exempt - Article 16 of Directive 77/388/EC **AAE = Exempt - Article 28b(C)** **AAL = Reverse Charge - 2nd subparagraph of Article 16(1) of Directive 77/388/EC** **E = Exempt from tax** **S = Standard rate** **Z = Zero rated goods**
3446	Party tax identifier	C an..20	N	not used
1227	Calculation sequence code	C an..3	N	not used

Comment:
When sending a message with data element 5278 in the TAX segment, the tax rate (numeric) should be presented in an alpha-numeric field as follows: 19.5% ==> :19.5
In European business environment, it is recommended to use SG52 as well to summarize line items belonging to the same exemption category. Assuming an invoice with a mixture of line items (1000 EUR) subject to VAT and line items (1000 EUR) subject to tax exemption, the following example would explain the recommendation:
SG50: Total invoice amount (MOA+77) 2160.00 EUR
SG50: Total taxable amount (MOA+125) 1000.00 EUR
SG50: Total tax amount (MOA+176) 160.00 EUR
SG50: Total exemption amt (MOA+403) 1000.00 EUR
SG52: Tax rate and amounts - VAT
SG52: Tax rate and type (TAX+7) 16% VAT
SG52: Taxable amount (MOA+125) 1000.00 EUR
SG52: Tax amount (MOA+124) 160.00 EUR
SG52: Tax rate and amounts - exempt code AAA
SG52: Tax rate and type (TAX+7) 0% AAA (exempt ...)
SG52: Taxable amount (MOA+125) 1000.00 EUR
SG52: Tax amount (MOA+124) 0.00 EUR

Example:
```
TAX+7+VAT+++:::16+S'
```

UN/EDIFACT Message: Segment details

Group: **SG52** Status: R Max. Occ.: 4 Tax rates and amounts

Segment: **MOA** Seq. No.: 87 Level: 2 **Monetary amount**
Status: D Max. Occ.: 1
Counter: 2270

Name: **Tax amount in home currency**

Description of segment:

UN/EDIFACT			Implementation	
	Name	St Format	St Format	Use / Comments
MOA				
C516	Monetary amount	M	M	
5025	Monetary amount type code qualifier	M an..3	M an..3	**124 = Tax amount**
5004	Monetary amount	C n..35	R n..15	Tax Amount
6345	Currency identification code	C an..3	R an..3	Home currency, coded according to ISO 4217 three alpha code.
6343	Currency type code qualifier	C an..3	O an..3	**3 = Home currency**
4405	Status description code	C an..3	N	not used

Comment:

Example:
```
MOA+124:160:SEK:3'
```

UN/EDIFACT Message: Segment details

Group: **SG52** Status: R Max. Occ.: 4 Tax rates and amounts

Segment: **MOA** Seq. No.: 88 Level: 2 **Monetary amount**
Status: D Max. Occ.: 1
Counter: 2270

Name: **Tax amount in Invoicing or payment currency**

Description of segment:

UN/EDIFACT			Implementation	
	Name	St Format	St Format	Use / Comments
MOA				
C516	Monetary amount	M	M	
5025	Monetary amount type code qualifier	M an..3	M an..3	**124 = Tax amount**
5004	Monetary amount	C n..35	R n..15	Tax Amount
6345	Currency identification code	C an..3	D an..3	Invoicing or payment currency, coded according to ISO 4217 three alpha code.
6343	Currency type code qualifier	C an..3	O an..3	**4 = Invoicing currency** **11 = Payment currency** Note that 4 =Invoicing currency and 11 = payment currency are to be understood as synonymous)
4405	Status description code	C an..3	N	not used

Comment:

Example:
```
MOA+124:160:SEK:10'
```

UN/EDIFACT Message: Segment details

Group: **SG52** Status: R Max. Occ.: 4 Tax rates and amounts

Segment: **MOA** Seq. No.: 89 Level: 2 **Monetary amount**
Status: R Max. Occ.: 1
Counter: 2270

Name: **Taxable amount in Invoicing or Payment currency**

Description of segment:

UN/EDIFACT			Implementation	
	Name	St Format	St Format	Use / Comments
MOA				
C516	Monetary amount	M	M	
5025	Monetary amount type code qualifier	M an..3	M an..3	**125 = Taxable amount**
5004	Monetary amount	C n..35	R n..15	Taxable Amount
6345	Currency identification code	C an..3	R an..3	Use ISO 4217 three alpha code. Invoicing or Payment currency, coded according to ISO 4217 three alpha code.
6343	Currency type code qualifier	C an..3	O an..3	**4 = Invoicing currency** **11 = Payment currency** Note that 4 =Invoicing currency and 11 = payment currency are to be understood as synonymous)
4405	Status description code	C an..3	N	not used

Comment:

Example:
```
MOA+125:1000:SEK:4'
```

UN/EDIFACT Message: Segment details

Segment: **UNT** Seq. No.: 90 Level: 0 **Message trailer**
Status: M Max. Occ.: 1
Counter: 2330

Name: **Message trailer**

Description of segment:

UN/EDIFACT			Implementation	
	Name	St Format	St Format	Use / Comments
UNT				
0074	Number of segments in the message	M n..6	M n..6	Number of segments in the message
0062	Message reference number	M an..14	M an..14	

Comment:

Example:
```
UNT+162+1'
```

UN/EDIFACT Message: Segment details

5.1 Invoice Profile

5.1.1 This message covers the invoicing function using one of the following processes.

- Classic invoicing: The message is sent by the seller to the buyer claiming payment for goods despatched under mutually agreed conditions.
- Self-billing: The message is sent by the buyer to the seller to settle payment for goods despatched under mutually agreed conditions. The buyer will arrange for payment according to agreed conditions. Not described in this chapter

One invoice must refer to one order from the buyer and one or more transport event.

An invoice may refer to (R = Required for business needs or VAT legislations):

- Buyer in following roles **(R)**
  - One buyer
  - One buyer as officially registered (if required in legislation)
- Seller in following roles **(R)**
  - One seller
  - One seller as officially registered
- Other parties
  - One pay-to
  - Invoicee
  - Invoice issuer
- Payment means
- One payment condition
- Terms of delivery
- Currency information: the pricing currency of the invoice, a different payment currency if agreed between the parties, and a specific VAT amount currency (home currency) when different from the pricing currency or payment currency **(R)**
- General information
- One set of legal and fiscal information
- Allowance and charges
- Different transport services **(R)**
- Dimensions, quantities, prices, different dates, different sums and amounts at line level **(R)**
- One or more allowances/charges at article line level agreed between Buyer and Seller
- Free text information
- References
- Package information
- Locations
- Other parties (ship from, ship to, carrier, agent, debiting office, delivery party)
- Transport details
- Article or allowance/charge (Used upon agreement) related to more than one VAT category and rate.

UN/EDIFACT Message: Segment details

- An invoice may contain adjustments related to prices/amounts to avoid differences caused by fractions (e.g., used in Sweden)
- VAT exempt for crossboarder between different EU countries.

UN/EDIFACT Message: Segment details

5.1.2 Invoicing EU Directive 77/388/EC

Since 20040101 a new Invoicing directive was implemented in EU. Required information in this directive was defined and has to be used in all EU countries. This information has been stated in the specifications as Required in EU. Other countries outside EU should also send this information to harmonise the specification.

In order to simplify the use of Tax Exemption Reason, a codelist have been created for this purpose. It should be used cross-border between different EU countries.

AAA Exempt – Article 146, 148 and 151 of Council Directive 2006/112//EC **Exemption of exports from the Community and like transactions and international transport.** To be used when invoicing goods which are delivered to a non-EC country and when invoicing certain services, where these are directly connected with the export of goods.
AAB Exempt – Article 164 of Council Directive 2006/112//EC **Special exemptions linked to international goods traffic.** To be used when invoicing goods which are imported from a non EC country into an approved warehouse, or free zone, within the EC area, and held in warehouse under VAT suspension. This arrangement may also include VAT suspended goods movements between different approved warehouses within the EC provided that the goods are re-exported from the warehouse to a non-EC country. Should also be used for transport costs included in customs value. *Example: a company in EC country A imports goods from US and stores them in an approved warehouse, under VAT suspension. The EC company A then sells the goods to a company in EC country B and transfer the goods from the warehouse in country A to a warehouse in country B, still under VAT suspension.* *Then the company in country B sells and delivers the goods to a company in Russia.*
AAC Exempt – Article 138 of Council Directive 2006/112//EC **Exempt Intra-Community supplies of goods.** To be used when invoicing goods which are delivered from one EC country to another EC country if the customer has a VAT number in another EC country. The goods have to be dispatched or transported by or on behalf of the vendor or the person acquiring the goods.
AAE Reverse Charge – Article 48, 49 and 50 of Council Directive 2006/112//EC **Reverse Charge Intra-Community transport services.** To be used when invoicing the transport of goods within the EC and ancillary services to these transports, services rendered by intermediaries, services on movable tangible property, where the customer is registered for VAT in a different EC country to that of the supplier.
AAF Exempt – Article 346 of Council Directive 2006/112//EC **Exemption under the special scheme for investment gold.** To be used when invoicing investment gold to a customer in another EC country, where the special scheme for investment gold is applicable.
AAG Exempt – Article 131, 132 and 135 of Council Directive 2006/112//EC **Exempt within the territory of the country.** To be used when invoicing, within the supplier's own country, goods and services that are

UN/EDIFACT Message: Segment details

exempt from VAT under the national legislation – e.g. banking-, insurance services, hospital care, medicine and education.
AAH Margin Scheme – Title X11,Chapter 4 of Council Directive 2006/112//EC **Special arrangements applicable to second-hand goods, works of art, collectors items and antiques.** To be used when invoicing second-hand goods, works of arts, collector's items and antiques where the margin scheme is applicable.
AAI Margin Scheme –Title X11, Chapter 3 of Council Directive 2006/112//EC **Margin scheme for travel agents** To be used when invoicing for travel arrangements where the margin scheme for travel agents is applicable.
AAJ Reverse Charge – Article 198 of Council Directive 2006/112//EC **Reverse charge procedure applying to supplies of gold.** To be used when the supplier of the investment gold, which would otherwise be exempt from VAT, has exercised the right to "option to tax", under the Article 26b(C) of directive 77/388/EC. Under this "option to tax" arrangement, the customer is liable to account for VAT on supply, under the reverse charge procedure.
AAK Reverse Charge – Article 194 of Council Directive 2006/112//EC **Reverse charge procedure. Special scheme for non VAT registered companies within an EC country in case of domestic supply of goods and services to a VAT registered purchaser in that EC country.** To be used when invoicing goods and certain services, from a supplier (a foreign entity) who is not established and registered for VAT in an EC country, to a customer who is VAT registered in that EC country.
AAL Reverse Charge Exempt - Article 164 of Council Directive 2006/112//EC **Reverse charge procedure when goods cease to be covered by warehousing arrangements.** To be used when invoicing goods from a non-EC country which have been held in an approved warehouse and should be removed for consumption in an EC country (i.e. not re-exported as in AAB). *Example: still using the example above (AAB) as a base the company in country A sells and transfers the goods to a company in country B but in this case the company in country B sells and deliver the goods to EC country C for domestic consumption.*
AAM Exempt New Means of Transport – Article 2, 3 and 4 of Council Directive 2006/112//EC **Intra-Community supply of a new means of transport.** To be used when invoicing a supply of new means of transport to a customer in another EC country.
AAN Exempt Triangulation – Article 141 of Council Directive 2006/112//EC **Triangulation** To be used when invoicing by a company who is the middleman in a triangulation chain i.e. goods trade between three parties in different EC countries and the goods delivered from the first part to the last part.
AAO Reverse Charge – Article 196 of Council Directive 2006/112//EC **Reverse charge procedure for services such as consultant, lawyer, information, ADB and translation.** To be used when invoicing taxable services for example consultant-, lawyer-, auditor-,

UN/EDIFACT Message: Segment details

translation- and information services, ADB and preparing systems and programs, advertising to EC countries and certain non EC countries.
AAP VAT exempt/reverse charge, within the construction business, Article 199 1 a-b of Council Directive 2006/112//EC **Reverse charge Supply of certain services within the construction businesses should be taxable by the purchaser instead of the seller.** The services should concern property, building or other establishment. The services mentioned are land- and ground work, construction work, installations, construction finalize work, letting of construction machinery with driver, construction cleaning and letting of labour for these services. The purchaser should be a business which supplies the same services.

UN/EDIFACT Message: Segment details

5.1.3 Example Message for a Freight Invoice

UNH+0001+INVOIC:D:03A:UN:GBS212'	Message header segment. Message type INVOIC based on UN/CEFACT directory D03A, compliant to the SMSI Freight Invoice Profile 2.1
BGM+380+4700584'	380 = Invoice message, number 4700584
DTM+137:20080305:102'	Invoice date 5 mars 2008
FTX+ABL+++Legal info text'	Free text. Legal or fiscal information
NAD+BY+59331234::87++TILA AB++TRELLEBORG++23132+SE'	Buyer
RFF+VA:SE565088600601'	Buyer's VAT registration number
CTA+IC+Logistik:Helena Sandberg'	Buyer's contact person
COM+0410123456:TE'	Buyer's contact person telephone number
NAD+IV+59331234::87++TILA AB++TRELLEBORG++23132+SE'	Invoicee
CTA+IC+Finans:Holmgren'	Invoicee contact person
NAD+SE+20::87++EXPRESS (SWEDEN)AB+FRAKTVÄGEN 7+MALMÖ++ 21111+SE'	Seller
FII+RH+123-1234:Bankgiro+BG'	Seller's Financial institution information
RFF+VA:SE5651031234'	Seller's VAT registration number
CTA+IC+IT:CAJ OLSSON'	Seller's contact person
NAD+PE+00105438::87++EXPRESS(SWEDEN) AB+VARGSTIGEN 85+TÄBY++17087+SE'	Pay-to
FII+BF+123-1234:Bankgiro+BG'	Pay-to Financial institution information
RFF+VA:SE5651031234'	Pay-to's VAT registration number
CTA+IC+:Svensson'	Pay-to's contact person
COM+08555555:TE'	Pay-to's contact person telephone number
CUX+2:SEK:4+3:SEK:11+1.0'	Pricing currency: SEK
DTM+134:20080301:102'	Currency date
PYT+3++66'	Payment terms, Fixed date, specified in DTM
DTM+140:20080504:102'	Payment due date
PCD+15:2'	Penalty percentage: 15 %
TOD+6++CIP'	Terms of delivery: CIP=Cost, Insurance, Freight (. named port of destination)
LOC+1+:::AALBORG ÖST'	Place of terms of delivery
LIN+1'	Line item sequence number
MEA+PD+AAD+KGM:10960'	Dimensions: Total gross weight 10960 KGM
MEA+PD+ACV+MTR:8.6'	Dimensions: Loading meters 8.6 MTR
DTM+143:20070302:102'	Acceptance date/time of goods
FTX+AAA+1++FLOOR'	Goods description
FTX+MKS+1++TILAABN'	Additional marks/numbers information
MOA+203:4256.49:SEK'	Net line item amount (Including allowance/charge but not VAT and payment discount)
RFF+AAS:ABC-ED-7601756'	Reference: despatch note number 7601756

UN/EDIFACT Message: Segment details

PAC+19++PL'	Packing information
LOC+8+DK-9220:16'	Location Place of destination. Use place or zip code
LOC+5+TRELLEBORG:16'	Location Place of departure. Use place or zip code
NAD+ST+00000000::87++EP MÖLLER & SÖN+ÖLGODVEJ 3+AALBORG ÖST++9220+DK'	Ship to party
NAD+SF+00000000::87++TILA AB+PERSVÄGEN 22+TRELLEBORG++23132+SE'	Ship from party
ALC+C++6++ACA::87:FRAKT'	Allowance: Freight charge, special service see code list
MOA+8:3440:SEK'	Allowance amount
TAX+7+VAT+++:::25+S'	Allowance tax rate 25%
ALC+C++6++ACA::87:KAPACITETSTILLÄGG'	Allowance: Freight charge, special service see code list
MOA+8:103.2:SEK'	Allowance amount
TAX+7+VAT+++:::25+S'	Allowance tax rate 25%
ALC+C++6++ACA::87:DRIVMEDELSJUSTERING'	Allowance: Freight charge, special service see code list
MOA+8:545.65:SEK'	Allowance amount
TAX+7++++:::25+S'	Allowance tax rate 25%
ALC+C++6++ACA::87:VALUTAJUSTERING’	Allowance: Freight charge, special service see code list
MOA+8:167.64:SEK'	Allowance amount
TAX+7+VAT+++:::25+S'	Allowance tax rate 25%
TDT+20+19410325870+30+++++:::WYE091’	Transport details
UNS+S'	Section Control
MOA+79:4256.49:SEK:11'	Total line item amount in invoicing or payment currency
MOA+125:4256.49:SEK:11'	Total taxable amount in invoicing or payment currency
MOA+176:1064.12:SEK:11'	Total tax amount in invoicing or payment currency
MOA+165:0.39:SEK:11’	Total invoice price adjustment amount in invoicing or payment currency
MOA+77:5321:SEK:11'	Total invoice amount in Invoicing or payment currency
TAX+7+VAT+++:::25+S'	Tax sum
MOA+124:1064.12:SEK:3'	Tax Amount in home currency
MOA+125:4256.49:SEK:11'	Taxable amount in Invoicing or Payment currency
UNT+62+0001'	Message trailer, 60 segment in the message, message reference number 1

UN/EDIFACT Message: Segment details

5.2 Profile Chart

In this profile chart you can find an easy way the information covered by the Freight invoice profile

MessageAttributes		Classic Freight Invoice
Header section		
	Buyer	➨
	Seller	➨
	Payee	➨
	Message date	➨
	Horizon start-end date	➨
	References (to documents, messages, etcetera)	➨
	Currency details	➨
	Payment terms	➨
	Transport terms	➨
	Allowances and charges	➨
	General information	➨
Line item section		
	Line ID	➨
	Dimensions details	➨
	Quantity details	➨
	Dates (related to invoice line)	➨
	References (to documents, messages, etcetera)	➨
	Goods identities	➨
	Price amounts	➨
	Line Item amounts	➨
	VAT info for line amounts	➨
	Packaging information	➨
	Locations/places (related to transport)	➨
	Parties (ship from, ship to, carrier…)	➨
	Allowances and charges	➨
	Transport details	➨
Sum section		
	Total amounts	➨
	Tax totals	➨

UN/EDIFACT Message: Segment details

APPENDIX 1: MAINTENANCE REQUEST FORM

Maintenance Request Form (SMSI Freight)	
Name of Submitter:	**Date:**
Company:	
Company Address:	
Phone: **Fax:**	**E-mail:**
MAINTENANCE REQUEST	
Page Number of Change:	
Document Currently Reads:	
Recommended Changes/Should Read:	
Reason for Change (Use additional sheets if necessary):	
Signature of Submitter:	
Complete form and return, or send an e-mail, to Odette Sweden, Box 26173, 100 41 Stockholm, fax: +46 8 791 23 11, e-mail: sten.lindgren@odette.se, website: http://www.odette.se **Change requests could also be sent to BEAst and to Sveriges Transportindustriförbund, see page 6 for complete addresses**	

UN/EDIFACT Message: Segment details

APPENDIX II: USED CODES

Please note that this list of used codes is a general document created for all global automotive EDI messages. This means that there are codes in the list of used codes that are not used in this specification. This list is available at

www.beast.se
www.odette.se
www.swedfreight.se